A B C D E F G H I J LT L M

SECTION LT
LIGHTING SYSTEM

CONTENTS

PRECAUTION 3
Precautions for Supplemental Restraint System (SRS) “AIR BAG” and “SEAT BELT PRE-TEN-SIONER” 3
Precaution 3
Wiring Diagrams and Trouble Diagnosis 3
HEADLAMP - DAYTIME LIGHT SYSTEM - 4
Component Parts and Harness Connector Location..... 4
System Description 4
DESCRIPTION 4
OUTLINE 5
DAYTIME LIGHT OPERATION 5
HEADLAMP OPERATION (DAYTIME LIGHT CANCEL OPERATION) 6
OPERATION TABLE 6
Schematic 7
Wiring Diagram — H/LAMP — 8
Terminals and Reference Value for Daytime Light Control Unit 11
Trouble Diagnoses 12
Check Daytime Light Relay 14
Aiming Adjustment of Headlamp 15
PREPARATION BEFORE ADJUSTING 15
LOW BEAM AND HIGH BEAM 15
Bulb Replacement 16
HEADLAMP 16
Removal and Installation of Headlamp 16
REMOVAL 16
INSTALLATION 16
TURN SIGNAL AND HAZARD WARNING LAMPS.. 17
System Description 17
TURN SIGNAL OPERATION 17
HAZARD LAMP OPERATION 18
Wiring Diagram — TURN — 19
Trouble Diagnoses 21
Electrical Components Inspection 21
COMBINATION FLASHER UNIT CHECK 21
HAZARD SWITCH CHECK 22
Bulb Replacement 22
FRONT TURN SIGNAL LAMP 22
SIDE TURN SIGNAL LAMP 22
REAR TURN SIGNAL LAMP 22
Removal and Installation of Front Turn Signal Lamp.. 22
Removal and Installation of Side Turn Signal Lamp.. 22
REMOVAL 22
INSTALLATION 23
Removal and Installation of Rear Turn Signal Lamp.. 23
LIGHTING AND TURN SIGNAL SWITCH 24
Removal and Installation 24
REMOVAL 24
INSTALLATION 24
HAZARD SWITCH 25
Removal and Installation 25
REMOVAL 25
INSTALLATION 25
STOP LAMP 26
Wiring Diagram — STOP/L — 26
Bulb Replacement 27
STOP LAMP 27
HIGH-MOUNTED STOP LAMP 27
Removal and Installation of Stop Lamp 27
Removal and Installation of High-Mounted Stop Lamp 27
REMOVAL 27
INSTALLATION 27
BACK-UP LAMP 28
Wiring Diagram — BACK/L — 28
Bulb Replacement 29
Removal and Installation 29
PARKING, LICENSE PLATE AND TAIL LAMPS 30
Wiring Diagram — TAIL/L — 30
Bulb Replacement 32
PARKING LAMP 32
LICENSE PLATE LAMP 32
TAIL LAMP 32
Removal and Installation of Parking Lamp 32
REMOVAL 32
INSTALLATION 32
Removal and Installation of License Plate Lamp ... 33
REMOVAL 33

INSTALLATION 33
Removal and Installation of Tail Lamp 33
SIDE MARKER LAMP 34
Bulb Replacement 34
FRONT SIDE MARKER LAMP 34
REAR SIDE MARKER LAMP 34
Removal and Installation of Front Side Marker Lamp 35
REMOVAL 35
INSTALLATION 35
Removal and Installation of Rear Side Marker Lamp 35
REMOVAL 35
INSTALLATION 35
FRONT FOG LAMP 36
System Description 36
DESCRIPTION 36
FOG LAMP OPERATION 36
Wiring Diagram — F/FOG — 37
Aiming Adjustment 38
Bulb Replacement 39
Removal and Installation 39
REMOVAL 39
INSTALLATION 39
HIGH-MOUNTED STOP LAMP 40
Bulb Replacement 40
Removal and Installation 40
REAR COMBINATION LAMP 41
Bulb Replacement 41
Removal and Installation 41
REMOVAL 41
INSTALLATION 41
COMBINATION SWITCH 42
Removal and Installation 42
Switch Circuit Inspection 42
INTERIOR ROOM LAMP 43
System Description 43
POWER SUPPLY AND GROUND 43
SWITCH OPERATION 44
BATTERY SAVER 45
Schematic 46
Wiring Diagram —ROOM/L— 47
Interior Room Lamp Timer Does Not Operate 51
Interior Room Lamp Timer Does Not Cancel 54
Bulb Replacement 56
INTERIOR ROOM LAMP 56
LUGGAGE ROOM LAMP 56
Removal and Installation of Interior Room Lamp 56
REMOVAL 56
INSTALLATION 56
Removal and Installation of Luggage Room Lamp 56
STEP LAMP 57
Wiring Diagram — STEP/L — 57
Bulb Replacement 58
Removal and Installation 58
REMOVAL 58
INSTALLATION 58
MAP LAMP 59
Wiring Diagram —INT/L— 59
Bulb Replacement 60
MAP LAMP (WITHOUT SUNROOF) 60
MAP LAMP (WITH SUNROOF) 60
Removal and Installation of Map Lamp (Without Sunroof) 60
REMOVAL 60
INSTALLATION 60
Removal and Installation of Map Lamp (With Sunroof) 60
REMOVAL 60
INSTALLATION 60
ILLUMINATION 61
System Description 61
Schematic 62
Wiring Diagram -ILL- 63
BULB SPECIFICATIONS 67
Headlamp 67
Exterior Lamp 67
Interior Lamp/Illumination 67

PRECAUTION

PFP:00011

Precautions for Supplemental Restraint System (SRS) “AIR BAG” and “SEAT BELT PRE-TENSIONER”

AKS00B7A

The Supplemental Restraint System such as “AIR BAG” and “SEAT BELT PRE-TENSIONER”, used along with a front seat belt, helps to reduce the risk or severity of injury to the driver and front passenger for certain types of collision. Information necessary to service the system safely is included in the SRS and SB section of this Service Manual.

WARNING:

- **To avoid rendering the SRS inoperative, which could increase the risk of personal injury or death in the event of a collision which would result in air bag inflation, all maintenance must be performed by an authorized NISSAN/INFINITI dealer.**
- **Improper maintenance, including incorrect removal and installation of the SRS, can lead to personal injury caused by unintentional activation of the system. For removal of Spiral Cable and Air Bag Module, see the SRS section.**
- **Do not use electrical test equipment on any circuit related to the SRS unless instructed to in this Service Manual. SRS wiring harnesses can be identified by yellow and/or orange harnesses or harness connectors.**

Precaution

AKS00B7B

- Do not touch the glass of bulb directly by hand. Keep grease and other oily matters away from it. Do not touch bulb by hand while it is lit or right after being turned off. Burning may result.
- Do not leave bulb out of headlamp reflector for a long time because dust, moisture, smoke, etc. may affect the performance of the headlamp. When replacing the bulb, be sure to replace it with a new one.
- Adjust aiming by tightening aiming screw. (To adjust it toward loosening side, first loosen adjusting screw, and then make adjustment by tightening.)
- To remove soil or sealant of bulbs, do not use organic solvent (thinner, gasoline, etc.)
- When replacing bulb, be sure to hold bulb socket and pull it out straight. If wiring harness of the bulb is pulled at an angle, the bulb may be caught in the lamp, making it difficult to take out.

Wiring Diagrams and Trouble Diagnosis

AKS00B7C

When you read wiring diagrams, refer to the followings:

- Refer to GI-14, "How to Read Wiring Diagrams" in GI section.
- Refer to PG-2, "POWER SUPPLY ROUTING" for power distribution circuit in PG section.

When you perform trouble diagnosis, refer to the followings:

- Refer to GI-10, "HOW TO FOLLOW TEST GROUPS IN TROUBLE DIAGNOSES" in GI section.
- Refer to GI-26, "How to Perform Efficient Diagnosis for an Electrical Incident" in GI section.

HEADLAMP - DAYTIME LIGHT SYSTEM -

PFP:26010

Component Parts and Harness Connector Location

AKS00BPX

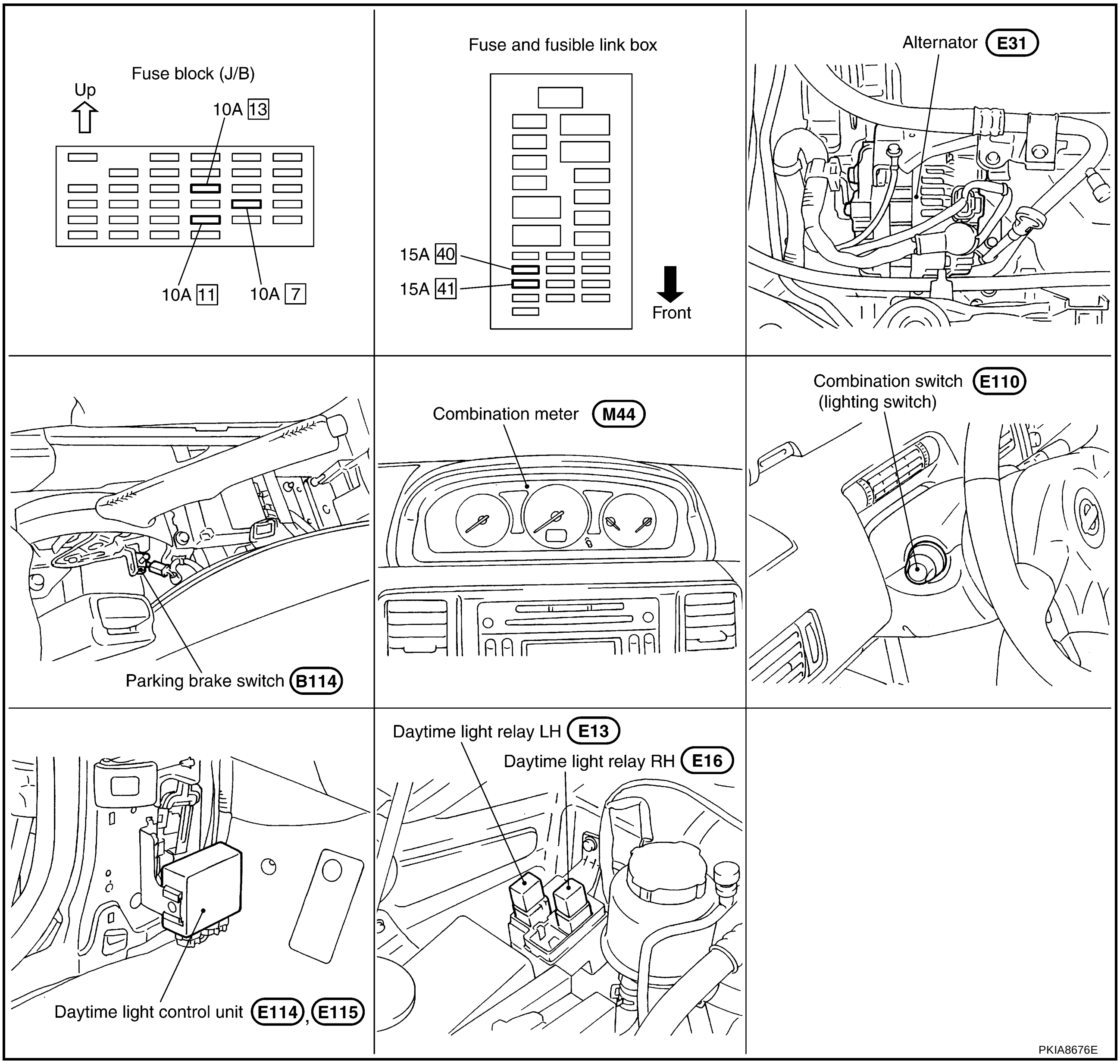

System Description

AKS00BPJ

DESCRIPTION

- Daytime light system is a system that turns on HIGH beam as dimmer blinking automatically while driving with lighting switch OFF or 1ST position (including temporary stop at an intersection).
- HIGH beam dimmer blinks automatically reducing the amount of light when starting engine and taking off the parking brake.
- Daytime light system does not start unless the parking brake is turned off (drive theater mode).
- Daytime light system is not released by putting on the parking brake when making a stop at an intersection.
- Put on the parking brake, stop the engine, and restart the engine to select drive theater mode.
- Daytime light system stops when shifting lighting switch to the 2ND or PASS position.
- Daytime light control unit performs dimmer blinking, opening the circuit that connects bilateral HIGH beams in series.

OUTLINE

Power is supplied at all times

- through 15A fuse (No. 40, located in fuse and fusible link box)
- to daytime light control unit terminal 3
- to combination switch (lighting switch) terminal 8 and
- to daytime light relay LH terminal 5
- through 15A fuse (No. 41, located in fuse and fusible link box)
- to daytime light control unit terminal 2
- to combination switch (lighting switch) terminal 5 and
- to daytime light relay RH terminal 5.

When the ignition switch is ON or START position, power is supplied

- through 10A fuse [No.13, located in fuse block (J/B)]
- to daytime light control unit terminal 12
- through 10A fuse [No.11, located in fuse block (J/B)]
- to combination meter (charge) terminal 2.

When the ignition switch is START position, power is supplied

- through 10A fuse [No.7, located in fuse block (J/B)]
- to daytime light control unit terminal 1.

Ground is supplied

- to daytime light control unit terminal 9
- to headlamp RH terminal 2
- to daytime light relay LH terminal 2
- to daytime light relay RH terminal 2
- through grounds E24 and E50
- to combination meter (HIGH beam indicator) terminal 19
- through grounds M27 and M70.

DAYTIME LIGHT OPERATION

With the engine running, the lighting switch is OFF or 1ST position and parking brake released, the daytime light control unit controls internal relay. When internal relay, power is supplied

- through daytime light control unit terminal 6
- to headlamp LH terminal 1
- through headlamp LH terminal 2
- to daytime light control unit terminal 7
- through daytime light control unit terminal 8
- to headlamp RH terminal 1.

Ground is supplied

- to headlamp RH terminal 2
- through grounds E24 and E50.

With power and grounds supplied, the daytime light illuminate. The HIGH beam headlamps are now wired in series and illuminate at a reduce intensity.

HEADLAMP OPERATION (DAYTIME LIGHT CANCEL OPERATION)

HEADLAMP RH

When the combination switch (lighting switch) is turned to the 2ND position and placed in LOW position, power is supplied

- from combination switch (lighting switch) terminal 7
- to headlamp RH terminal 3.

When the combination switch (lighting switch) is turned to the 2ND position and placed in HIGH or PASS position, power is supplied

- from combination switch (lighting switch) terminal 6
- to daytime light relay RH terminal 1
- through daytime light relay RH terminal 3
- to headlamp RH terminal 1.

HEADLAMP LH

When the combination switch (lighting switch) is turned to the 2ND position and placed in LOW position, power is supplied

- from combination switch terminal 10
- to daytime light relay LH terminal 1
- through daytime light relay LH terminal 3
- to headlamp LH terminal 3.

When the combination switch (lighting switch) is turned to the 2ND position and placed in HIGH or PASS position, power is supplied

- from combination switch (lighting switch) terminal 9
- to daytime light control unit terminal 5
- through daytime light control unit terminal 6
- to headlamp LH terminal 1.

At the same time, power is supplied

- from combination switch (lighting switch) terminal 9
- to combination meter (HIGH beam indicator) terminal 20, and then indicator illuminates.

When the combination switch is shifted to HIGH or PASS, daytime light system is released after the signal is sent to the daytime light control unit terminal 5.
Also, when the combination switch is shifted to LOW, daytime light system is released after the signal is sent to the daytime control unit terminal 4.

OPERATION TABLE

Engine		Engine stopped									Engine running								
Lighting switch		OFF			1ST			2ND			OFF			1ST			2ND		
		Hi	Lo	P	Hi	Lo	P	Hi	Lo	P	Hi	Lo	P	Hi	Lo	P	Hi	Lo	P
Headlamp	HIGH beam	–	–	×	–	–	×	×	–	×	●*	●*	×	●*	●*	×	×	–	×
	LOW beam	–	–	–	–	–	–	–	×	–	–	–	–	–	–	–	–	×	–
Parking (clearance), side marker and tail lamp		–	–	–	×	×	×	×	×	×	–	–	–	×	×	×	×	×	×
License and instrument illumination lamp		–	–	–	×	×	×	×	×	×	–	–	–	×	×	×	×	×	×

- Hi: “HIGH beam” position
- Lo: “LOW beam” position
- P: “FLASH TO PASS” position
- ×: Lamp “ON”
- –: Lamp “OFF”
- ●: Lamp dims. (Added functions)
- *: When starting the engine with the parking brake released, the daytime light will come ON.
  When starting the engine with the parking brake pulled, the daytime light will not come ON.

Schematic

AKS00BPK

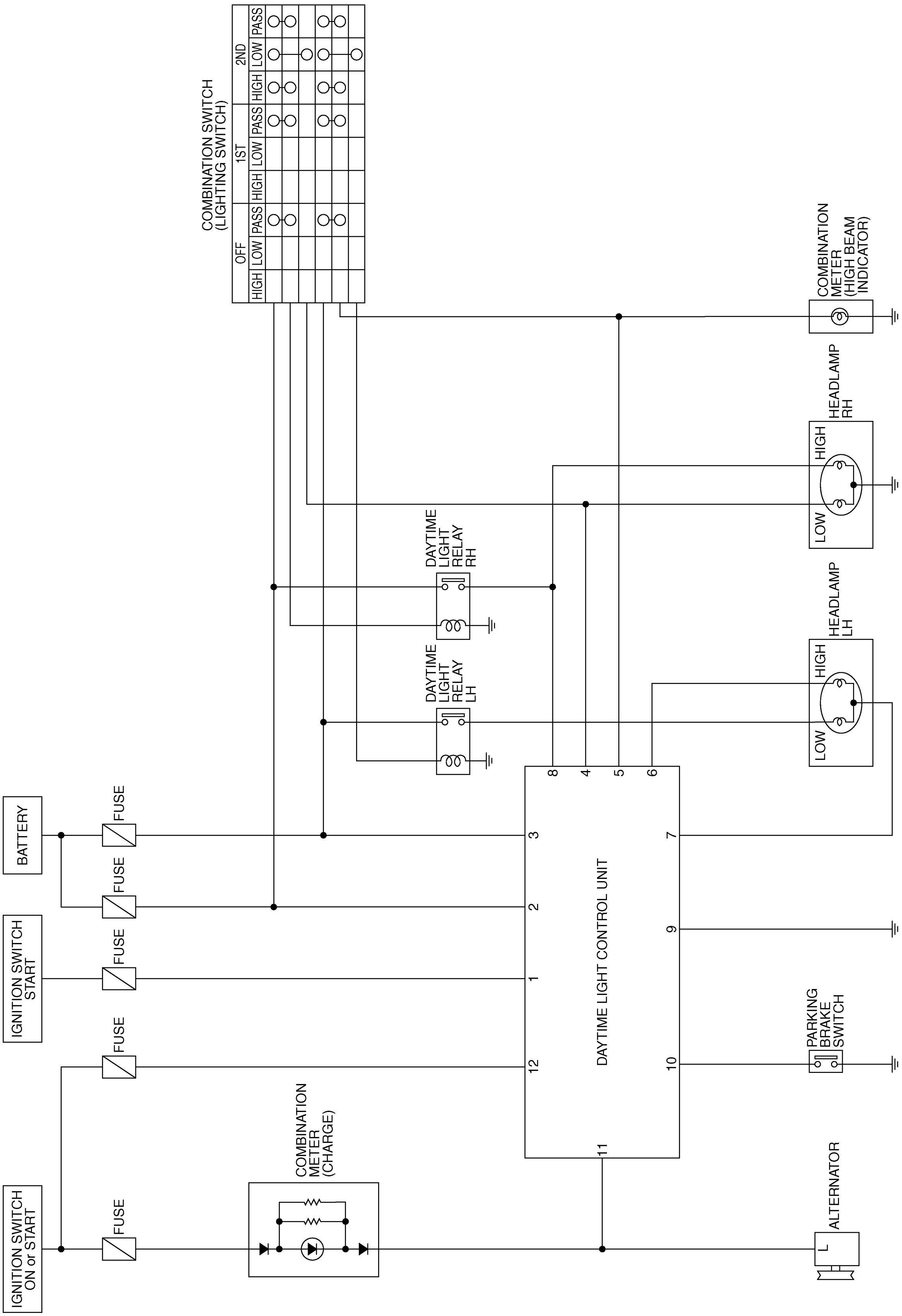

TKWB0150E

Wiring Diagram — H/LAMP —

AKS00BPL

LT-DTRL-01

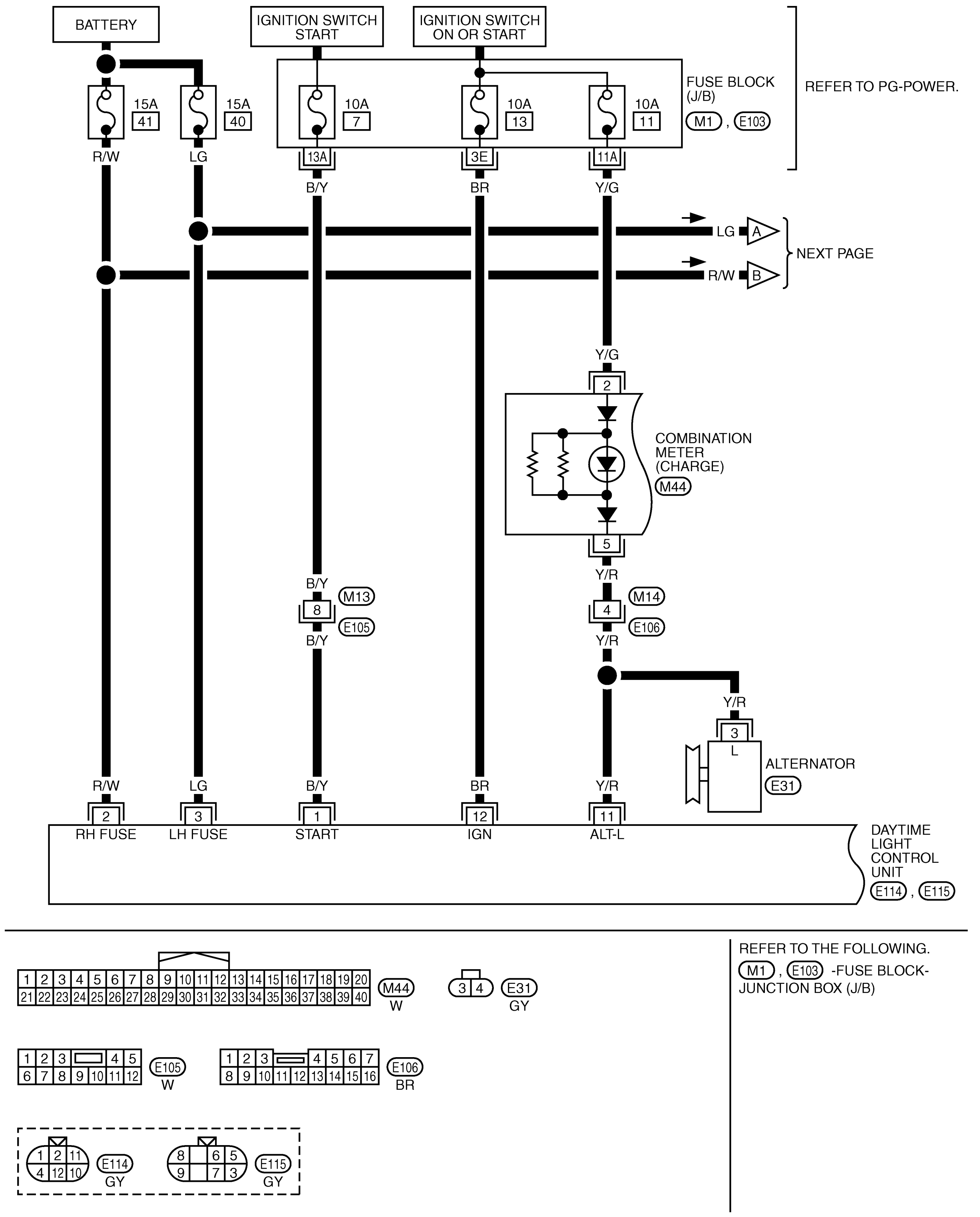

REFER TO THE FOLLOWING.
M1, E103 -FUSE BLOCK-JUNCTION BOX (J/B)

TKWB0151E

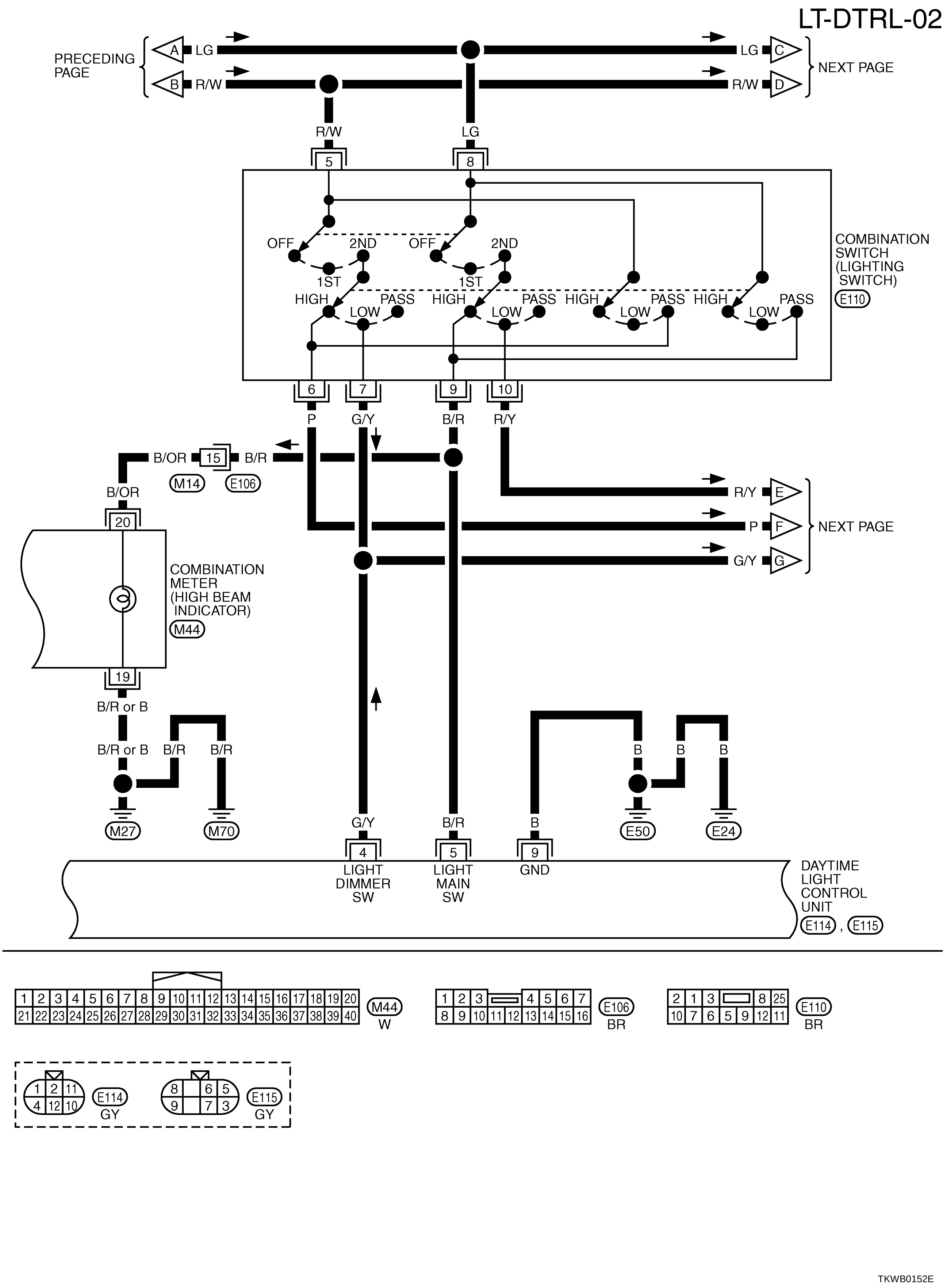
LT-DTRL-02
PRECEDING PAGE
A
LG
B
R/W
LG
C
R/W
D
NEXT PAGE
R/W
LG
5
8
OFF
2ND
1ST
HIGH
LOW
PASS
COMBINATION SWITCH (LIGHTING SWITCH)
E110
6
7
9
10
P
G/Y
B/R
R/Y
B/OR
15
M14
E106
20
COMBINATION METER (HIGH BEAM INDICATOR)
M44
19
B/R or B
E
F
G
NEXT PAGE
B
M27
M70
E50
E24
4
LIGHT DIMMER SW
LIGHT MAIN SW
GND
DAYTIME LIGHT CONTROL UNIT
E114
E115
W
BR
GY
TKWB0152E

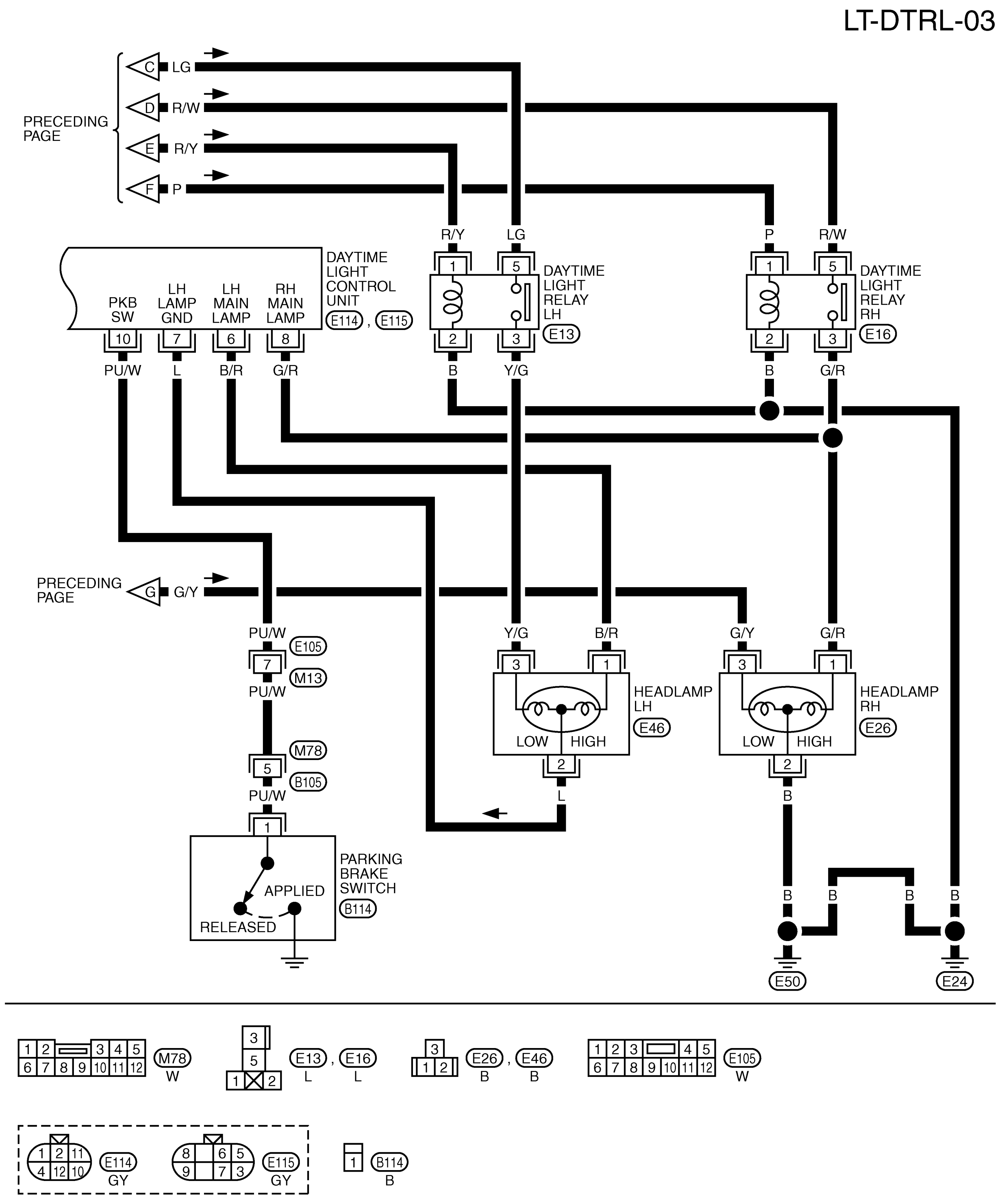
LT-DTRL-03
PRECEDING PAGE
C LG
D R/W
E R/Y
F P
R/Y
LG
P
R/W
DAYTIME LIGHT CONTROL UNIT
E114 , E115
PKB SW
LH LAMP GND
LH MAIN LAMP
RH MAIN LAMP
10
7
6
8
PU/W
L
B/R
G/R
DAYTIME LIGHT RELAY LH
E13
DAYTIME LIGHT RELAY RH
E16
B
Y/G
G/R
PRECEDING PAGE
G G/Y
PU/W
E105
M13
M78
B105
Y/G
B/R
G/Y
G/R
HEADLAMP LH
E46
HEADLAMP RH
E26
LOW
HIGH
PARKING BRAKE SWITCH
B114
APPLIED
RELEASED
E50
E24
M78 W
E13 L
E16 L
E26 B
E46 B
E105 W
E114 GY
E115 GY
B114 B
TKWB0153E

Terminals and Reference Value for Daytime Light Control Unit

AKS00BPY

Terminal No.	Wire color	Signal name	Operation or condition		Reference value
1	B/Y	Engine start signal	Ignition switch	START	Battery voltage
				ON, ACC or OFF	Approx. 0V
2	R/W	Power source for headlamp RH	—		Battery voltage
3	LG	Power source for headlamp LH	—		Battery voltage
4	G/Y	Headlamp LOW beam signal	Lighting switch	LOW	Approx. 12V
				Except LOW	Approx. 0V
5	B/R	Headlamp HIGH beam or PASS signal	Lighting switch	HIGH or PASS	Approx. 12V
				Except above	Approx. 0V
6	B/R	Headlamp LH HIGH	Drive theater mode		Approx. 0V
			Lighting switch HIGH, PASS or daytime light operating*		Approx. 12V
7	L	Headlamp LH ground	Daytime light operating*		Approx. 6V
			Lighting switch LOW and HIGH position		Approx. 0V
8	G/R	Headlamp RH HIGH	Daytime light operating*		Approx. 6V
			Lighting switch LOW position		Approx. 0V
			Lighting switch HIGH position		Approx. 12V
9	B	Ground for daytime light control unit	—		Approx. 0V
10	PU/W	Parking brake switch signal	Brake switch (Ignition switch is ON)	ON	Approx. 0V
				Released	Approx. 12V
11	Y/R	Alternator "L" terminal	Engine	Running	Approx. 12V
				Stopped	Approx. 0V
12	BR	Power source for daytime light control unit	Ignition switch	ON or START	Battery voltage
				Except above	Approx. 0V

* Daytime light operating: Lighting switch in OFF position with engine running and parking brake is released.

Trouble Diagnoses

AKS00BQ5

Inoperative System (or lamp)							Possible cause	Repair order
Theater mode	Daytime light	LOW beam		HIGH beam		High beam indicator		
		RH	LH	RH	LH			
	×						● 10A fuse ● Harness and connector ● parking brake switch ● Daytime light control unit	● Check 10A fuse [No.11, located in fuse block (J/B)]. ● Check harness between 15A fuse (No.41, located in fuse and fusible link box) and daytime light control unit terminal 2. ● Check harness between 15A fuse (No.40, located in fuse and fusible link box) and daytime light control unit terminal 3. ● Check harness between daytime light control unit terminal 8 and headlamp RH terminal 1. ● Check harness between daytime light control unit terminal 11 and alternator terminal 3. ● Check harness between 10A fuse [No.13, located in fuse block (J/B)] and daytime light control unit terminal 12. ● Check parking brake switch. ● Check daytime light control unit. Refer to LT-11, "Terminals and Reference Value for Daytime Light Control Unit" .
	×				×		● Bulb ● Harness and connector ● Daytime light control unit	● Check headlamp bulb LH (HIGH). ● Check continuity between daytime light control unit terminal 6 and headlamp LH terminal 1. ● Check daytime light control unit. Refer to LT-11, "Terminals and Reference Value for Daytime Light Control Unit"
	×			×			● Bulb	● Check headlamp bulb RH (HIGH).
	×		×		×		● Grounds E24 and E50 ● Harness and connector ● Daytime light control unit	● Check grounds E24 and E50. ● Check continuity between daytime light control unit terminal 7 and headlamp LH terminal 2. ● Check continuity between daytime light control unit terminal 9 and ground. ● Check daytime light control unit. Refer to LT-11, "Terminals and Reference Value for Daytime Light Control Unit" .
	×		×		×	×	● 15A fuse ● Harness and connector	● Check 15A fuse (No.40, located in fuse and fusible link box). ● Check harness between 15A fuse (No.40, located in fuse and fusible link box) and daytime light control unit terminal 3.
	×	×		×			● 15A fuse ● Harness and connector	● Check 15A fuse (No.41, located in fuse and fusible link box). ● Check harness between 15A fuse (No.41, located in fuse and fusible link box) and daytime light control unit terminal 2.
	×*	×	●**	×			● Harness and connector	● Check continuity between headlamp RH terminal 2 and ground.

Inoperative System (or lamp)							Possible cause	Repair order
Theater mode	Daytime light	LOW beam		HIGH beam		High beam indicator		
		RH	LH	RH	LH			
×							• Parking brake switch • Harness and connector • Daytime light control unit	• Check parking brake switch. • Check continuity between daytime light control unit terminal 10 and parking brake switch terminal 1. • Check daytime light control unit. Refer to LT-11, "Terminals and Reference Value for Daytime Light Control Unit" .
			×				• Bulb • Combination switch • Harness and connector • Daytime light relay LH • Daytime light control unit	• Check headlamp bulb LH (LOW). • Check combination switch. Refer to LT-42, "Switch Circuit Inspection" . • Check continuity between combination switch terminal 10 and daytime light relay LH terminal 1. • Check continuity between daytime light relay LH terminal 2 and ground. • Check continuity between combination switch terminal 7 and daytime light control unit terminal 4. • Check daytime light relay LH. Refer to LT-14, "Check Daytime Light Relay" . • Check daytime light control unit. Refer to LT-11, "Terminals and Reference Value for Daytime Light Control Unit" .
		×					• Bulb	• Check headlamp bulb RH (LOW).
					×		• Harness and connector • Daytime light control unit	• Check continuity between combination switch terminal 9 and daytime light control unit terminal 5. • Check daytime light control unit. Refer to LT-11, "Terminals and Reference Value for Daytime Light Control Unit" .
				×			• Combination switch • Harness and connector • Daytime light relay RH	• Check voltage between combination switch terminal 6 and ground. • Check combination switch. Refer to LT-42, "Switch Circuit Inspection" . • Check continuity between combination switch terminal 6 and daytime light relay RH terminal 1. • Check continuity between daytime light relay RH terminal 2 and ground. • Check daytime light relay RH. Refer to LT-14, "Check Daytime Light Relay" .
			●**				• Combination switch • Harness and connector	• Check voltage between combination switch terminal 7 and ground. • Check combination switch. Refer to LT-42, "Switch Circuit Inspection" . • Check continuity between combination switch terminal 7 and headlamp RH terminal 3.
			●**	×			• Combination switch • Harness and connector	• Check voltage between combination switch terminal 5 and ground. • Check combination switch. Refer to LT-42, "Switch Circuit Inspection" . • Check continuity between 15A fuse (No.41, located in fuse and fusible link box) and combination switch terminal 5.

Inoperative System (or lamp)							Possible cause	Repair order
Theater mode	Daytime light	LOW beam		HIGH beam		High beam indicator		
		RH	LH	RH	LH			
					×	×	● Combination switch ● Harness and connector	● Check voltage between combination switch terminal 9 and ground. ● Check combination switch. Refer to LT-42, "Switch Circuit Inspection" . ● Check continuity between combination switch terminal 9 and combination meter terminal 20.
			×		×	×	● Combination switch ● Harness and connector	● Check voltage between combination switch terminal 8 and ground. ● Check combination switch. Refer to LT-42, "Switch Circuit Inspection" . ● Check continuity between 15A fuse (No.40, located in fuse and fusible link box) and combination switch terminal 8.

*: Chattering noise can be heard from daytime light control unit when daytime light system is ON.
**: ● shows a condition that a lamp is lighted quite dimly.

Check Daytime Light Relay

AKS00C3G

1. Apply battery voltage to between terminal 1 and 2.
2. Check continuity between terminal 3 and 5.

3 – 5 :Continuity should exist.

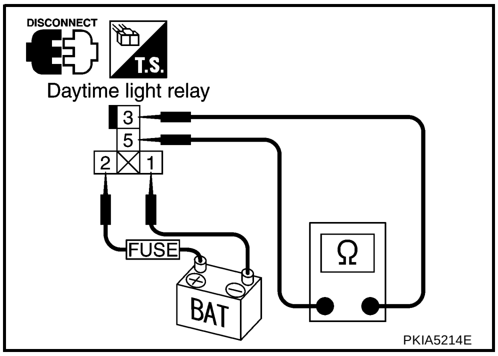

PKIA5214E

Aiming Adjustment of Headlamp

AKS00BPN

PREPARATION BEFORE ADJUSTING

For details, refer to the regulations in your country.
Before performing aiming adjustment, check the following.

- Keep all tires inflated to correct pressures.
- Place vehicle and tester on one and same flat surface.
- See that there is no-load in vehicle (coolant, engine oil filled up to correct level and full fuel tank) other than the driver (or equivalent weight placed in driver's position).

LOW BEAM AND HIGH BEAM

1. Turn headlamp low beam on.
2. Use aiming adjustment screws to perform aiming adjustment.

   NOTE:
   Vertical side must be adjusted finally, if horizontal side has been adjusted.

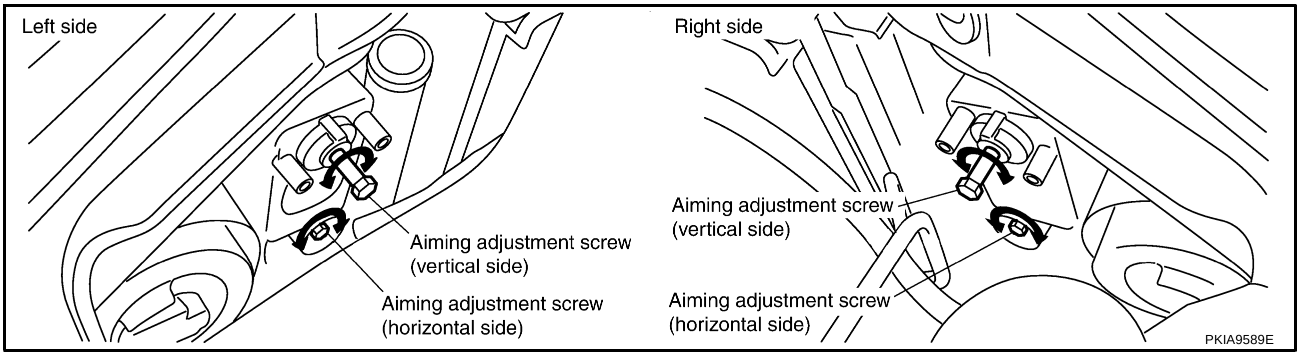

- First tighten aiming adjustment screw all the way and then make adjustment by loosening the screw.

If the vehicle front body has been repaired and/or the headlamp assembly has been replaced, check aiming. Use the aiming chart shown in the figure.

- Adjust headlamps so that main axis of light is parallel to center line of body and is aligned with point P shown in the figure.
- Figure shows headlamp aiming pattern for driving on right side of road; for driving on left side of road, aiming pattern is reversed.
- Dotted lines to point P in the figure show center of headlamp.

"H"	: Horizontal center line of headlamps
"WL "	: Distance between each headlamp center
"L"	: 10,000 mm (393.70 in)
"C"	: 135 mm (5.31 in)

- Basic illuminating area for adjustment should be within the range shown in the figure. Adjust headlamps accordingly.

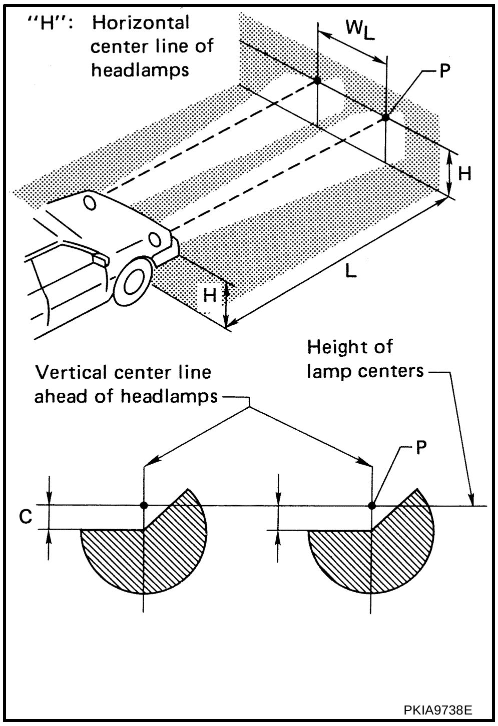

Bulb Replacement

AKS00BPP

HEADLAMP

1. Disconnect headlamp connector.
2. Remove rubber cap.
3. Unlock retaining spring, then remove bulb.
4. Installation is the reverse of removal.

Headlamp (High/Low) : 12V - 60/55W (H4)

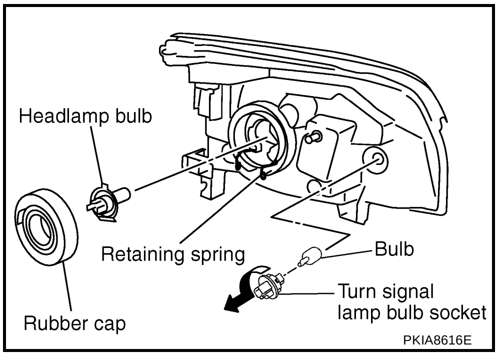

CAUTION:

- **Do not touch glass of bulb directly by hand. Keep grease and other oily matters away from it.**
- **Do not touch bulb by hand while it is lit or right after being turned off. Burning may result.**
- **When replacing bulb, prepare new bulb first of all. Do not leave bulb out of headlamp housing for a long period, because dust, moisture, or smoke will cause performance lowering (fouling, cloud, etc.) of headlamp reflector and lens.**
- **When bulb is installed, be sure to lock rubber cap to ensure watertightness.**

Removal and Installation of Headlamp

AKS00BPR

REMOVAL

1. Remove parking lamp. Refer to LT-32, "Removal and Installation of Parking Lamp" .
2. Disconnect headlamp connector and turn signal lamp connector.
3. Remove fender protector. Refer to EI-20, "FENDER PROTECTOR" in "EXTERIOR & INTERIOR (EI)" section.
4. Disconnect front side marker lamp connector and front fog lamp connector (with front fog lamp).
5. Remove front grille. Refer to EI-18, "FRONT GRILLE" in "EXTERIOR & INTERIOR (EI)" section.
6. Remove front bumper. Refer to EI-14, "FRONT BUMPER" in "EXTERIOR & INTERIOR (EI)" section.
7. Remove headlamp mounting bolts (3).
8. Pull headlamp toward the front of the vehicle.

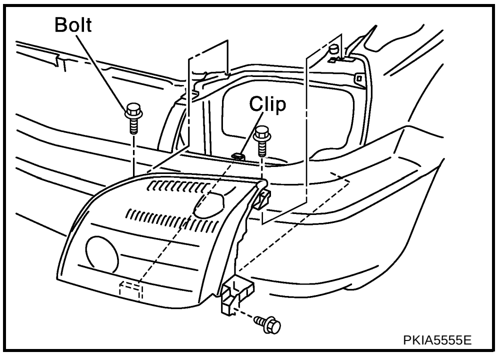

INSTALLATION

Installation is the reverse of removal. Note the tightening torque shown below.

Headlamp mounting bolt : 5.5 N·m (0.56 kg-m, 49 in-lb)

TURN SIGNAL AND HAZARD WARNING LAMPS

PFP:26120

System Description

AKS00B83

TURN SIGNAL OPERATION

With the hazard switch in OFF position and ignition switch is in ON or START position,
power is supplied

- through 10A fuse [No. 2, located in fuse block (J/B)]
- to hazard switch terminal 2
- through hazard switch terminal 1
- to combination flasher unit terminal 1
- through combination flasher unit terminal 3
- to combination switch (turn signal) terminal 1.

Ground is supplied

- to combination flasher unit terminal 2
- through grounds M27 and M70.

LH Turn

When the combination switch (turn signal switch) is moved to LH position,
power is supplied

- through combination switch (turn signal switch) terminal 3
- to front turn signal lamp LH terminal 1
- to side turn signal lamp LH terminal 1
- to combination meter (turn signal) terminal 52 and
- to rear combination lamp LH terminal 2.

Ground is supplied

- to front turn signal lamp LH terminal 2
- through grounds E24 and E50
- to side turn signal lamp LH terminal 2
- through grounds E24 and E50
- to rear combination lamp LH terminal 4
- through grounds B8 and B18
- to combination meter (turn signal) terminal 64
- through grounds M27 and M70.

With power and ground supplied, combination flasher unit controls flashing of LH turn signal lamps.

RH Turn

When combination switch (turn signal switch) is moved to RH position,
power is supplied

- through combination switch (turn signal switch) terminal 2
- to front turn signal lamp RH terminal 1
- to side turn signal lamp RH terminal 1
- to combination meter (turn signal) terminal 18 and
- to rear combination lamp RH terminal 2.

Ground is supplied

- to front turn signal lamp RH terminal 2
- through grounds E24 and E50
- to side turn signal lamp RH terminal 2
- through grounds E24 and E50
- to rear combination lamp RH terminal 4
- through grounds B8 and B18
- to combination meter (turn signal) terminal 64

- through grounds M27 and M70.

With power and ground supplied, combination flasher unit controls flashing of RH turn signal lamps.

HAZARD LAMP OPERATION

Power is supplied at all times

- through 10A fuse (No. 35, located in fuse and fusible link box)
- to hazard switch terminal 3.

With the hazard switch in ON position,
power is supplied

- through hazard switch terminal 1
- to combination flasher unit terminal 1
- through combination flasher unit terminal 3
- to hazard switch terminal 4.

Ground is supplied

- to combination flasher unit terminal 2
- through grounds M27 and M70.

Power is supplied (LH side)

- through hazard switch terminal 5
- to front turn signal lamp LH terminal 1
- to side turn signal lamp LH terminal 1
- to combination meter (turn signal) terminal 52 and
- to rear combination lamp LH terminal 2.

Power is supplied (RH side)

- through hazard switch terminal 6
- to front turn signal lamp RH terminal 1
- to side turn signal lamp RH terminal 1
- to combination meter terminal 18 and
- to rear combination lamp RH terminal 2.

Ground is supplied

- to front turn signal lamp LH and RH terminals 2 and
- to side turn signal lamp LH and RH terminals 2
- through grounds E24 and E50
- to rear combination lamp LH and RH terminals 4
- through grounds B8 and B18
- to combination meter (turn signal) terminal 64
- through grounds M27 and M70.

With power and ground supplied, combination flasher unit controls flashing of hazard warning lamps.

Wiring Diagram — TURN —

AKS00B84

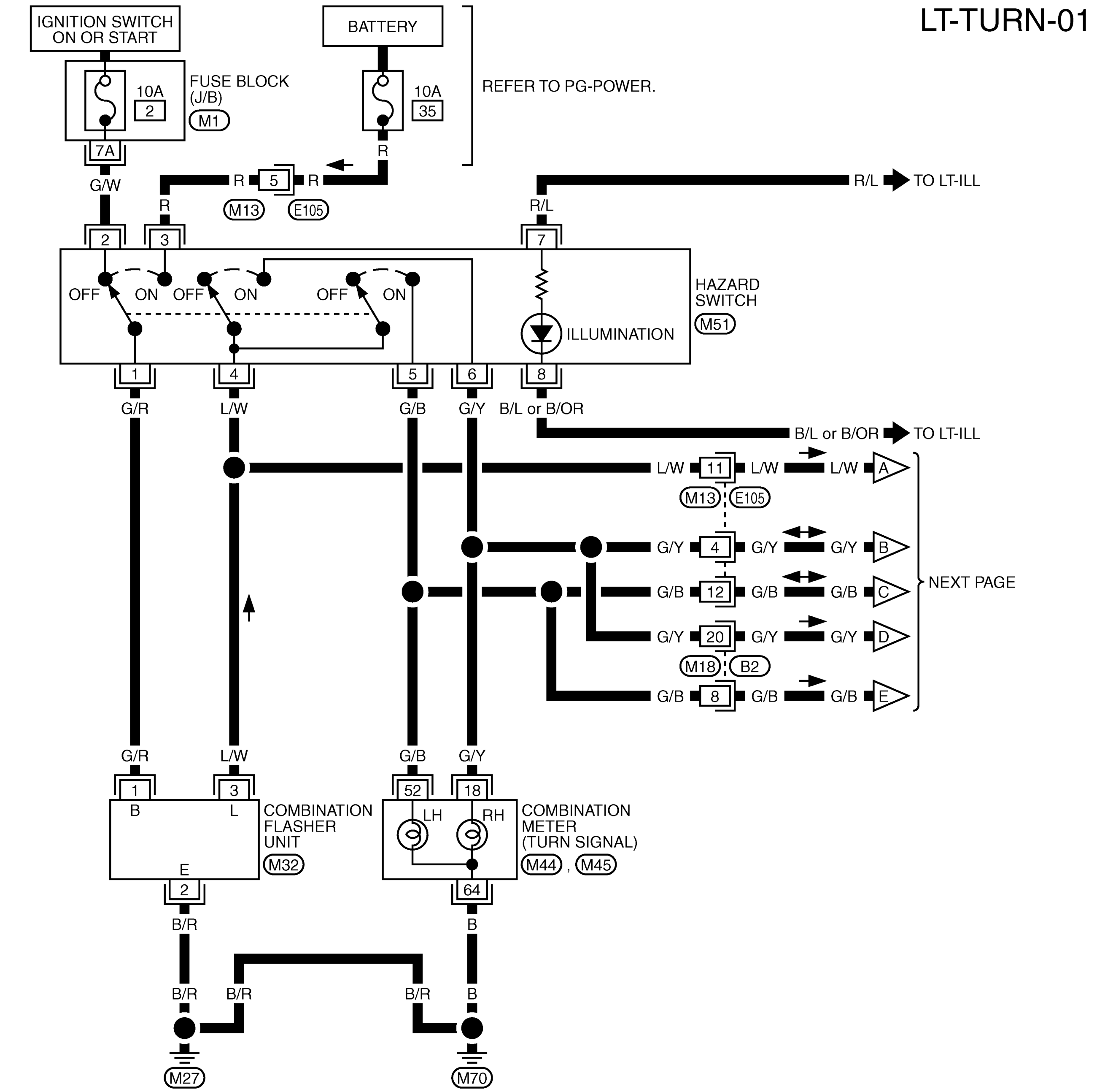

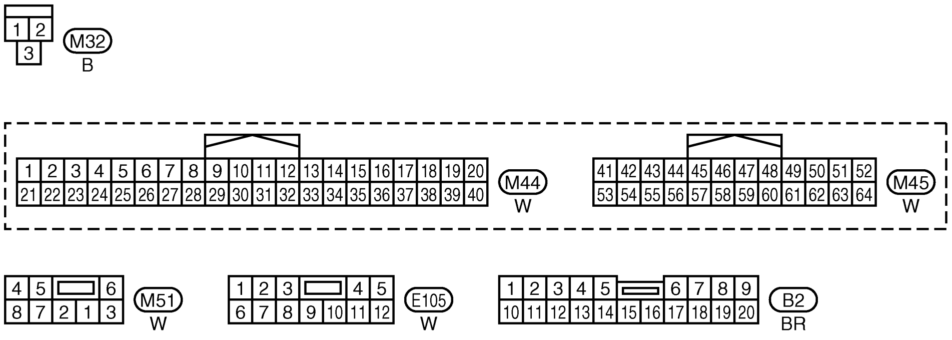

REFER TO THE FOLLOWING.

M1 -FUSE BLOCK-JUNCTION BOX (J/B)

TKWB0261E

LT-TURN-02

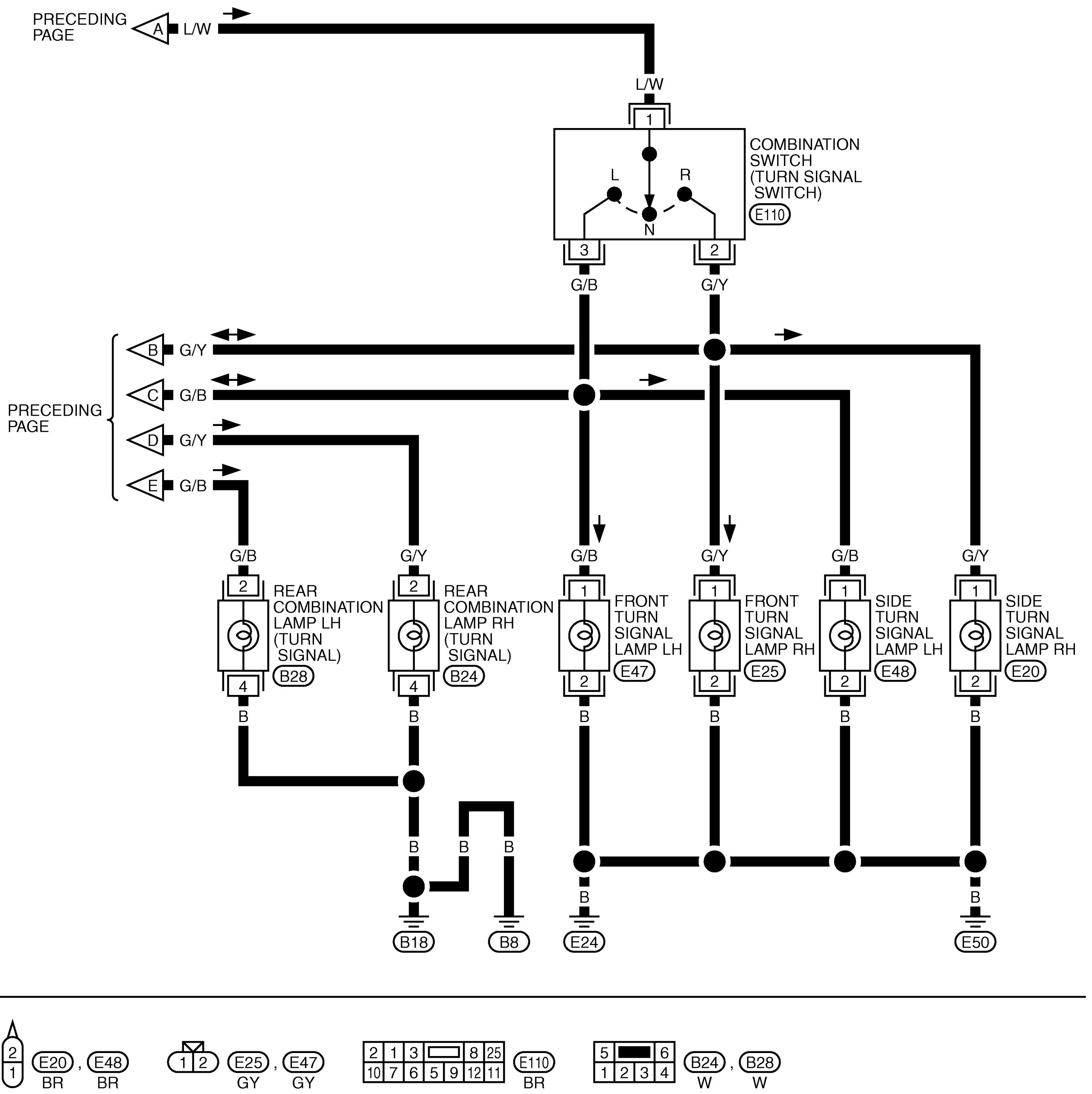

TKWA0073E

Trouble Diagnoses

AKS00B85

Symptom	Possible cause	Repair order
Turn signal and hazard warning lamps do not operate.	1. Hazard switch 2. Combination flasher unit 3. Open in combination flasher unit circuit	1. Check hazard switch. Refer to LT-22, "HAZARD SWITCH CHECK" . 2. Refer to LT-21, "COMBINATION FLASHER UNIT CHECK" . 3. Check wiring to combination flasher unit for open circuit.
Turn signal lamps do not operate but hazard warning lamps operate.	1. 10A fuse 2. Hazard switch 3. Turn signal switch 4. Open in turn signal switch circuit	1. Check 10A fuse [No. 2, located in fuse block (J/B)]. Turn ignition switch ON and verify battery positive voltage is present at terminal 2 of hazard switch. 2. Check hazard switch. Refer to LT-22, "HAZARD SWITCH CHECK" . 3. Check turn signal switch. Refer to LT-42, "Switch Circuit Inspection" . 4. Check wire between combination flasher unit terminal 3 and turn signal switch terminal 1 for open circuit.
Hazard warning lamps do not operate but turn signal lamps operate.	1. 10A fuse 2. Hazard switch 3. Open in hazard switch circuit	1. Check 10A fuse (No. 35, located in fuse and fusible link box). Verify battery positive voltage is present at terminal 3 of hazard switch. 2. Check hazard switch. Refer to LT-22, "HAZARD SWITCH CHECK" . 3. Check wire between combination flasher unit terminal 3 and hazard switch terminal 4 for open circuit.
Front turn signal lamp LH or RH does not operate.	1. Bulb 2. Grounds E24 and E50	1. Check bulb. 2. Check grounds E24 and E50.
Rear turn signal lamp LH or RH does not operate.	1. Bulb 2. Grounds B8 and B18	1. Check bulb. 2. Check grounds B8 and B18.
Side turn signal lamp LH or RH does not operate.	1. Bulb 2. Grounds E24 and E50	1. Check bulb. 2. Check grounds E24 and E50.
LH and RH turn indicators do not operate.	1. Ground	1. Check grounds M27 and M70.
LH or RH turn indicator does not operate.	1. Bulb	1. Check bulb in combination meter.

Electrical Components Inspection

AKS00B86

COMBINATION FLASHER UNIT CHECK

- Before checking, ensure that bulbs meet specifications.
- Connect a battery and test lamp to combination flasher unit, as shown. Combination flasher unit is properly functioning if it blinks when power is supplied to circuit.

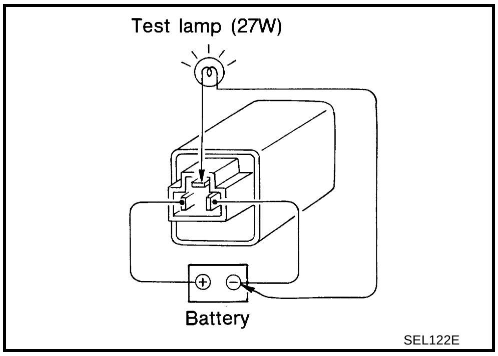

HAZARD SWITCH CHECK

- Check continuity between the terminals of hazard switch when hazard switch is turned ON and/or OFF.

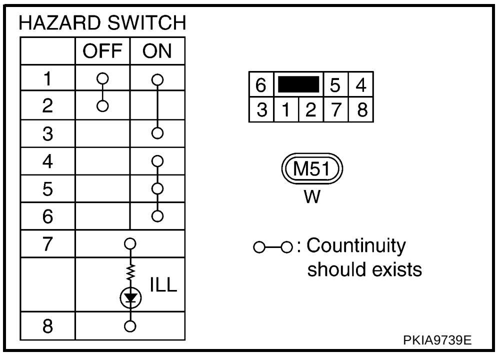

Bulb Replacement

AKS00B87

FRONT TURN SIGNAL LAMP

1. Turn bulb socket counterclockwise and unlock it.
2. Remove bulb from its socket.
3. Installation is the reverse of removal.

Front turn signal lamp : 12V - 21W (amber)

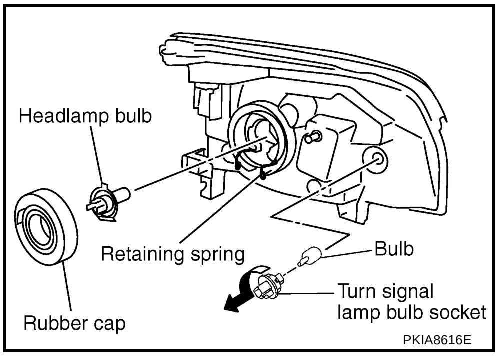

SIDE TURN SIGNAL LAMP

1. Remove side turn signal lamp. Refer to LT-22, "Removal and Installation of Side Turn Signal Lamp" .
2. Turn bulb socket counterclockwise and unlock it.
3. Remove bulb from its socket.
4. Installation is the reverse of removal.

Side turn signal lamp : 12V - 5W (amber)

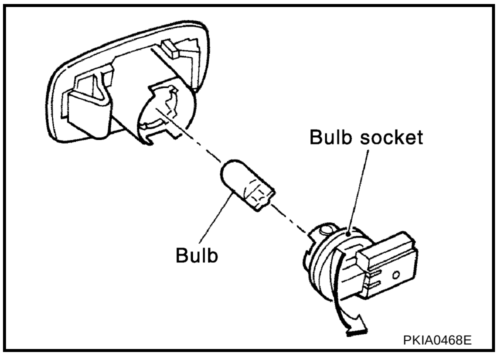

REAR TURN SIGNAL LAMP

Refer to LT-41, "Bulb Replacement" .

Removal and Installation of Front Turn Signal Lamp

AKS00B88

Refer to LT-16, "Removal and Installation of Headlamp" .

Removal and Installation of Side Turn Signal Lamp

AKS00B89

REMOVAL

1. Push side turn signal lamp toward A direction in the figure, and pull up B direction in the figure.
2. Disconnect side turn signal lamp connector.

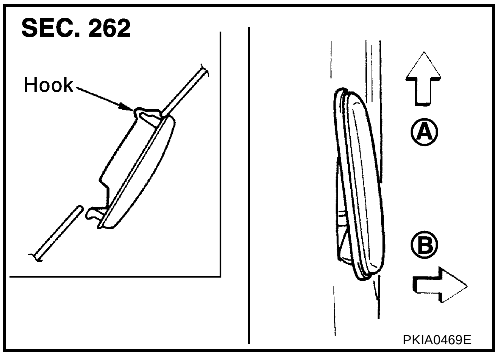

INSTALLATION

Installation is the reverse of removal.

Removal and Installation of Rear Turn Signal Lamp

AKS00B8A

Refer to LT-41, "Removal and Installation" .

LIGHTING AND TURN SIGNAL SWITCH

PFP:25540

Removal and Installation

AKS00B8B

REMOVAL

1. Remove steering column cover. Refer to IP-10, "INSTRUMENT PANEL ASSEMBLY" in “INSTRUMENT PANEL (EI)” section.
2. Remove screws (2), then remove lighting and turn signal switch from spiral cable.
3. Disconnect lighting and turn signal switch connector.

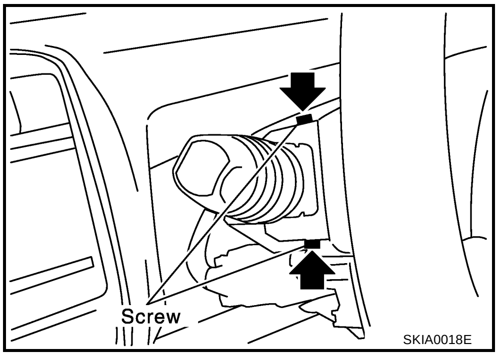

INSTALLATION

Installation is the reverse of removal.

HAZARD SWITCH

PFP:25290

Removal and Installation

AKS00B8D

REMOVAL

1. Remove cluster lid C. Refer to IP-10, "INSTRUMENT PANEL ASSEMBLY" in “INSTRUMENT PANEL (IP)” section.
2. Disconnect hazard switch connector.
3. Press hazard switch fixing pawls and remove it from cluster lid C.

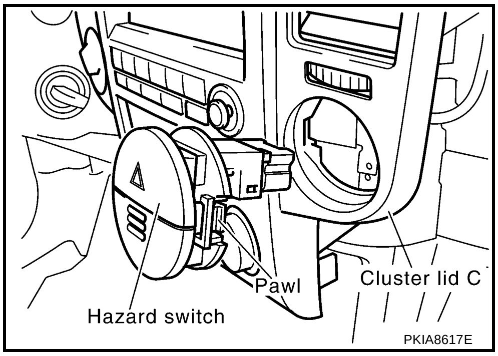

INSTALLATION

Installation is the reverse of removal.

STOP LAMP

PFP:26550

Wiring Diagram — STOP/L —

AKS00B8E

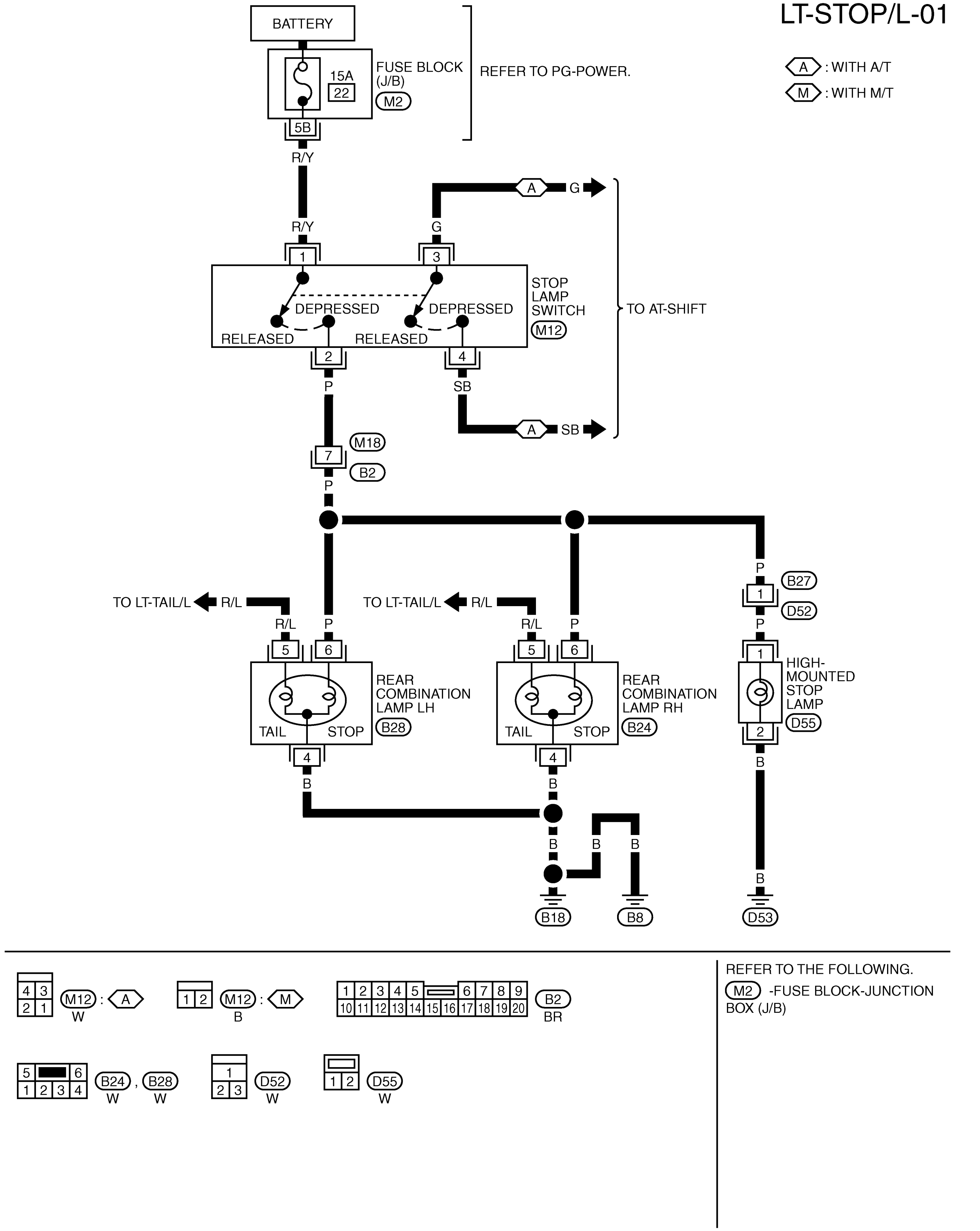

Bulb Replacement

AKS00B8F

STOP LAMP

Refer to LT-41, "Bulb Replacement" .

HIGH-MOUNTED STOP LAMP

1. Remove high-mounted stop lamp cover. Refer to LT-27, "REMOVAL" .
2. Turn high-mounted stop lamp bulb socket counterclockwise and unlock it.
3. Remove bulb from its socket.
4. Installation is the reverse of removal.

High-mounted Stop Lamp : 12V - 5W

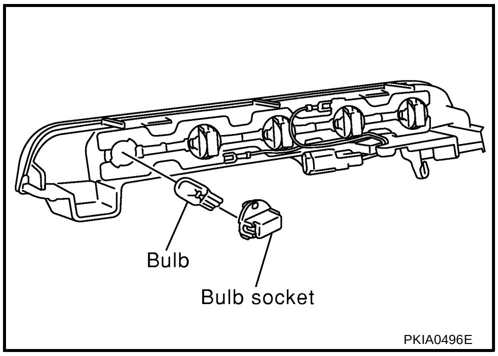

Removal and Installation of Stop Lamp

AKS00B8G

Refer to LT-41, "Removal and Installation" .

Removal and Installation of High-Mounted Stop Lamp

AKS00BQA

REMOVAL

1. Pull the edge of cover (A in the figure) to each side in turn downward until pawls inside cover are released.
2. Pull down cover toward under the vehicle.

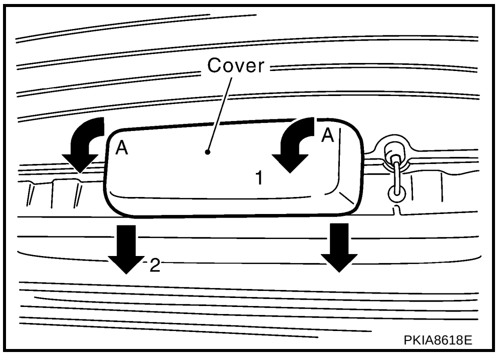

3. Remove high-mounted stop lamp mounting bolts (2).
4. Disconnect high-mounted stop lamp connector and remove high-mounted stop lamp from the vehicle.

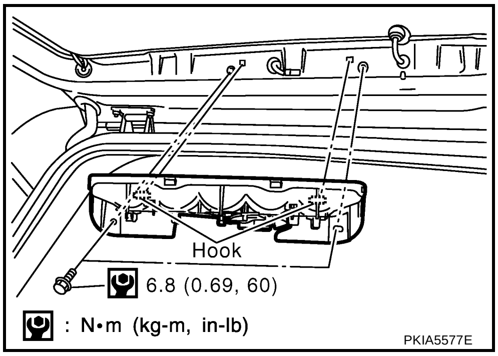

INSTALLATION

Installation is the reverse of removal. Note the tightening torque shown below.

High-mounted stop lamp mounting bolt : 6.8 N·m (0.69kg-m, 60 in-lb)

BACK-UP LAMP

PFP:26550

Wiring Diagram — BACK/L —

AKS00B8H

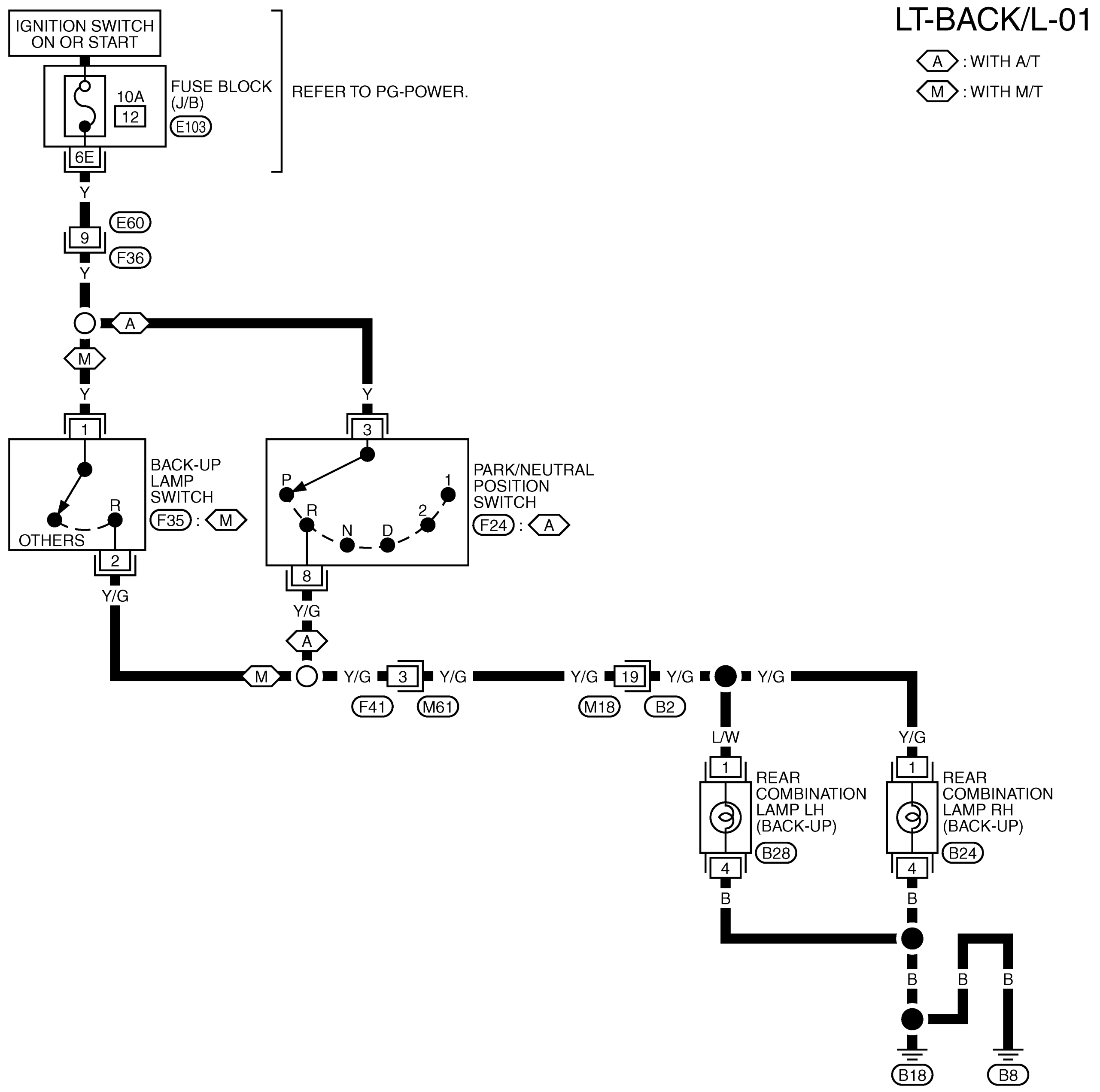

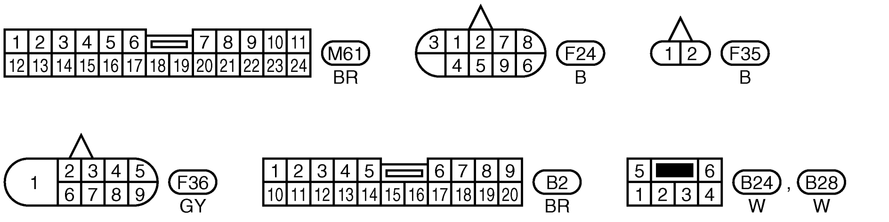

REFER TO THE FOLLOWING.
E103 -FUSE BLOCK-JUNCTION BOX (J/B)

TKWB0154E

Bulb Replacement

AKS00B8I

Refer to LT-41, "Bulb Replacement" .

Removal and Installation

AKS00B8J

Refer to LT-41, "Removal and Installation" .

PARKING, LICENSE PLATE AND TAIL LAMPS

PFP:26550

Wiring Diagram — TAIL/L —

AKS00B8K

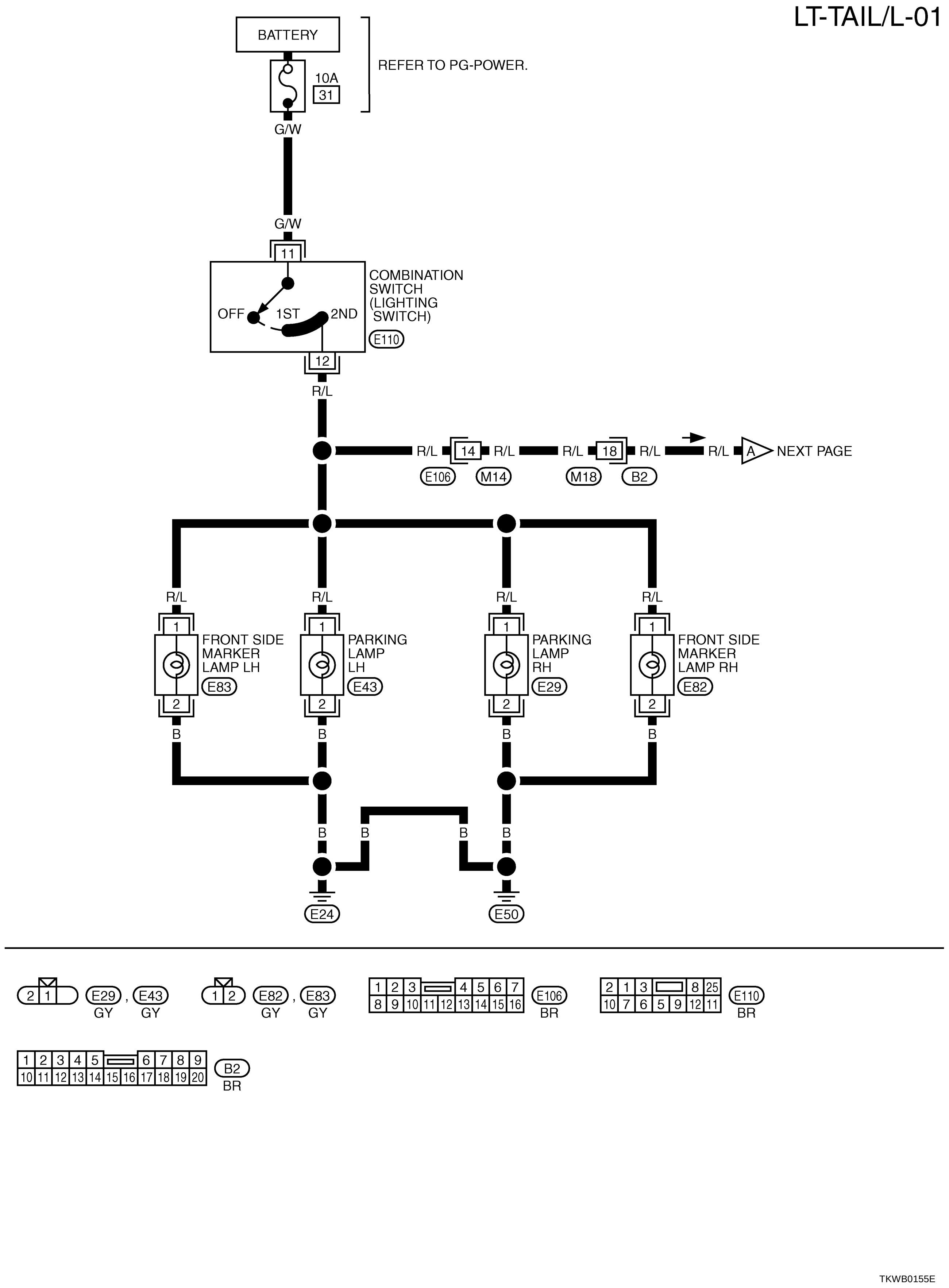

LT-TAIL/L-02

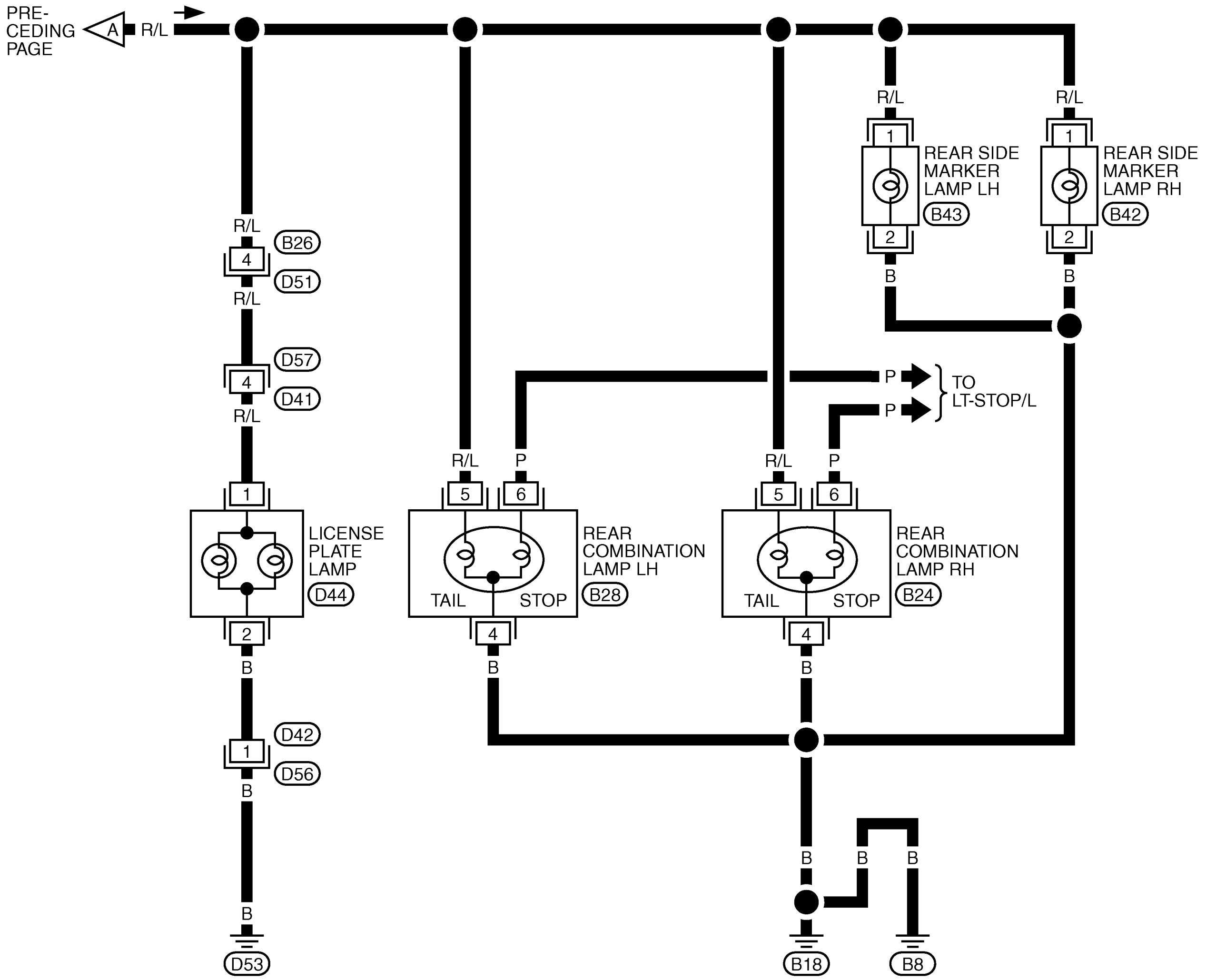

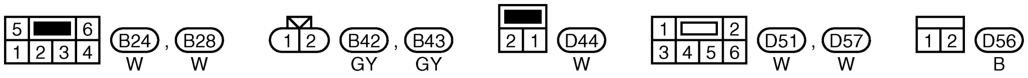

TKWB0156E

Bulb Replacement

AKS00B8L

PARKING LAMP

1. Remove parking lamp. Refer to LT-32, "Removal and Installation of Parking Lamp" .
2. Turn RH and LH bulb sockets counterclockwise and unlock them.
3. Remove bulb from its socket.
4. Installation is the reverse of removal.

Parking lamp : 12V - 21/5W (21W: Disuse)

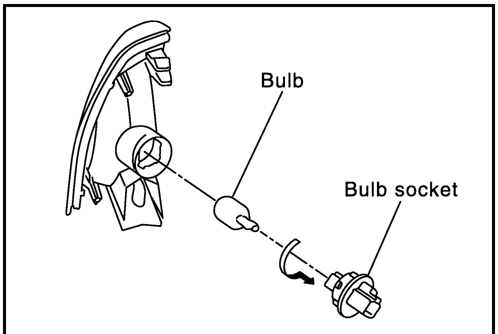

SKIA0053E

LICENSE PLATE LAMP

1. Remove license plate lamp mounting screws (2).
2. Remove lens of license plate lamp.
3. Remove bulb from its socket.
4. Installation is the reverse of removal.

License plate lamp : 12V - 5W

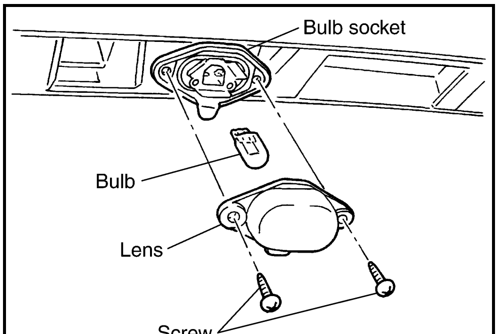

PKIA8753E

TAIL LAMP

Refer to LT-41, "Bulb Replacement" .

Removal and Installation of Parking Lamp

AKS00C39

REMOVAL

1. Press upper pawl to remove parking lamp toward the front of the vehicle.
2. Disconnect parking lamp connector.

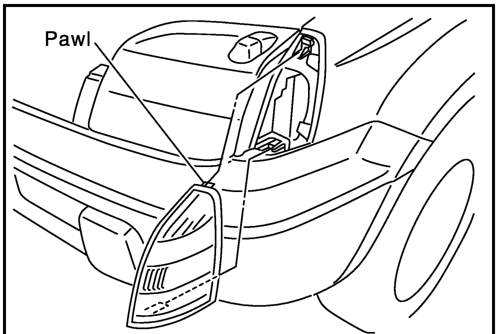

SKIA0054E

INSTALLATION

1. Connect parking lamp connector.
2. Insert pawl into headlamp hole, and install parking lamp.

Removal and Installation of License Plate Lamp

AKS00BQB

REMOVAL

1. Remove license lamp finisher. Refer to EI-31, "LICENSE LAMP FINISHER" in “EXTERIOR & INTERIOR (EI)” section.
2. Remove harness from installation pawl for harness.
3. Remove license plate lamp mounting screws (2 each, RH and LH).
4. Pull out license plate lamp from license lamp finisher.

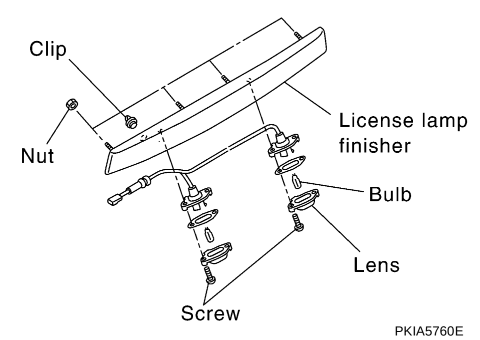

INSTALLATION

Installation is the reverse order of removal. Note the tightening torque shown below.

License plate lamp mounting screw : 1.4 N·m (0.14 kg-m, 12 in-lb)

Removal and Installation of Tail Lamp

AKS00C3B

Refer to LT-41, "Removal and Installation" .

SIDE MARKER LAMP

PFP:26180

Bulb Replacement

AKS00BQN

FRONT SIDE MARKER LAMP

1. Turn lighting switch OFF.
2. Remove fender protector (front). Refer to EI-20, "FENDER PROTECTOR" in “EXTERIOR & INTERIOR (EI) ” section.
3. Turn bulb socket counterclockwise and unlock it.
4. Remove bulb from its socket.
5. Installation is the reverse of removal.

Front side marker lamp : 12V - 5W

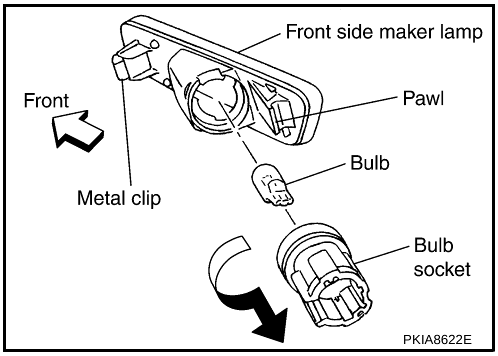

REAR SIDE MARKER LAMP

1. Turn lighting switch OFF.
2. Insert a screwdriver in the chink between rear side marker lamp and rim, and remove rear side marker lamp.

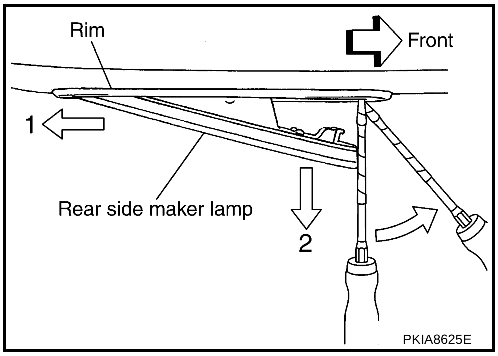

3. Turn bulb socket counterclockwise and unlock it.
4. Remove bulb from its socket.
5. Installation is the reverse of removal. Note the following.

NOTE:
To install rear side marker lamp into rim, put pawl side of rear side marker lamp into rim. Push metal clip side of rear side marker lamp.

Rear side marker lamp : 12V - 5W

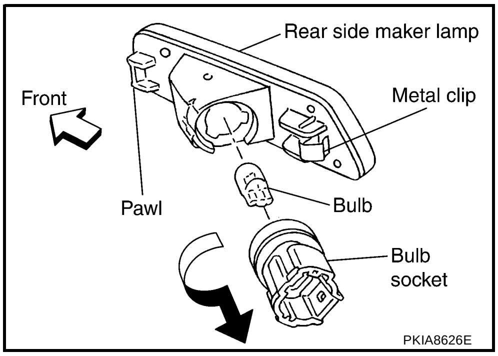

Removal and Installation of Front Side Marker Lamp

AKS00BQO

REMOVAL

1. Turn lighting switch OFF.
2. Remove fender protector (front). Refer to EI-20, "FENDER PROTECTOR" in “EXTERIOR & INTERIOR (EI)” section.
3. Disconnect front side marker lamp connector and front fog lamp connector (with front fog lamp).
4. Remove front grille. Refer to EI-18, "FRONT GRILLE" in “EXTERIOR & INTERIOR (EI)” section.
5. Remove front bumper. Refer to EI-14, "FRONT BUMPER" in “EXTERIOR & INTERIOR (EI)” section.
6. Remove front side marker lamp mounting screws (4).
7. Remove rim from bracket.
8. Remove front side marker lamp from rim.

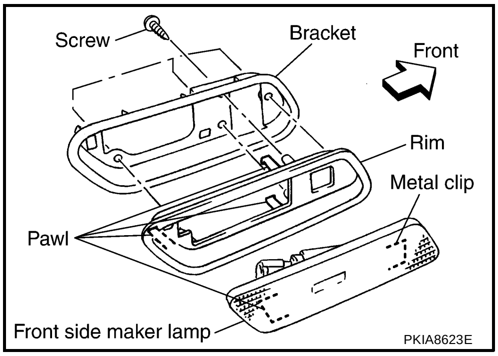

INSTALLATION

Installation is the reverse of removal. Note the following.

NOTE:

To install front side marker lamp into rim, put pawl side of front side marker lamp into rim. Push metal clip side of front side marker lamp.

Removal and Installation of Rear Side Marker Lamp

AKS00BQP

REMOVAL

1. Turn lighting switch OFF.
2. Remove rear bumper. Refer to EI-16, "REAR BUMPER" in “EXTERIOR & INTERIOR (EI)” section.
3. Disconnect rear side marker lamp connector.
4. Remove rear side marker lamp mounting screws (4).
5. Remove rim from bracket.
6. Remove rear side marker lamp from rim.

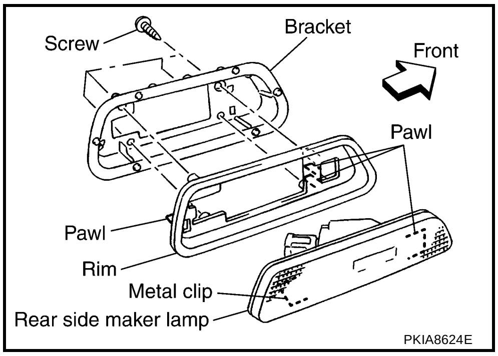

INSTALLATION

Installation is the reverse of removal. Note the following.

NOTE:

To install rear side marker lamp into rim, put pawl side of rear side marker lamp into rim. Push metal clip side of rear side marker lamp.

FRONT FOG LAMP

PFP:00011

System Description

AKS00B8O

DESCRIPTION

Power is supplied at all times

- through 10A fuse (No. 31, located in fuse and fusible link box)
- to combination switch (lighting switch) terminal 11
- through 15A fuse (No. 42, located in fuse and fusible link box)
- to front fog lamp relay terminal 3.

With lighting switch in the 1ST or 2ND position,
power is supplied

- through 10A fuse (No. 31, located in fuse and fusible link box)
- to combination switch (lighting switch) terminal 11
- through combination switch (lighting switch) terminal 12
- to combination switch (front fog lamp switch) terminal 32
- through combination switch (front fog lamp switch) terminal 31
- to front fog lamp relay terminal 2.

FOG LAMP OPERATION

The front fog lamp switch is built in combination switch. The lighting switch must be in the 1st or 2nd position for front fog lamp operation.
With front fog lamp switch in the ON position,
ground is supplied

- to front fog lamp relay terminal 1
- through grounds E24 and E50.

Front fog lamp relay is energized and power is supplied

- from front fog lamp relay terminal 5
- to front fog lamp LH and RH terminals 1 and
- to combination meter terminal 15.

Ground is supplied

- to front fog lamp LH and RH terminals 2
- through grounds E24 and E50
- to combination meter (front fog) terminal 64
- through grounds M27 and M70.

With power and ground supplied, front fog lamps illuminate.

Wiring Diagram — F/FOG —

AKS00B8P

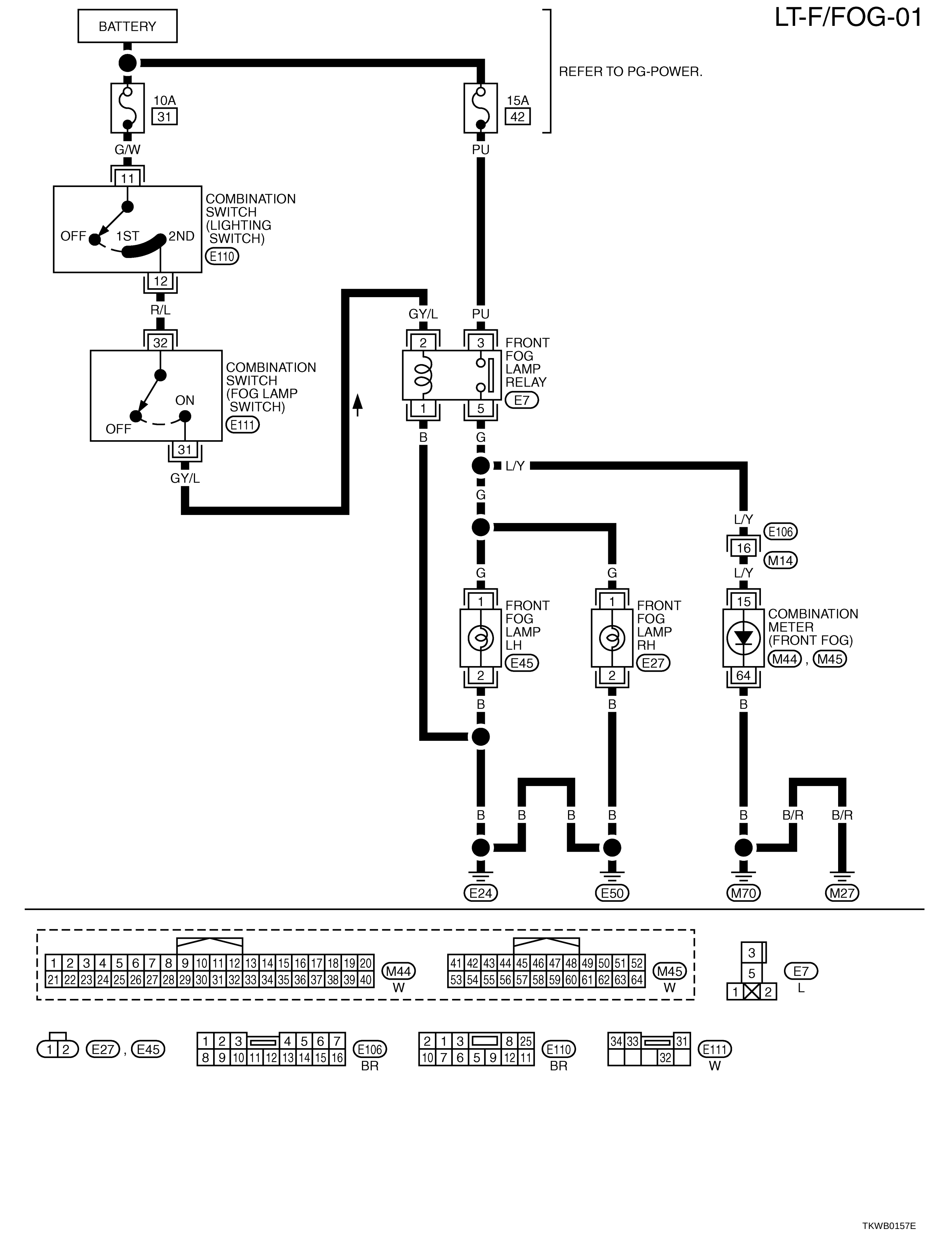

Aiming Adjustment

AKS00B8Q

1. Set the distance between the screen and the center of front fog lamp lens as shown in the figure.
2. Turn front fog lamps ON.

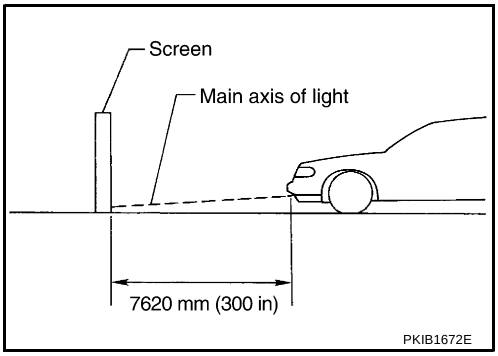

3. Insert a phillips screwdriver into the access hole and engage the tip of screwdriver with the gear of the adjuster as shown in the figure. Aiming adjuster can now be turned by turning screw-driver.

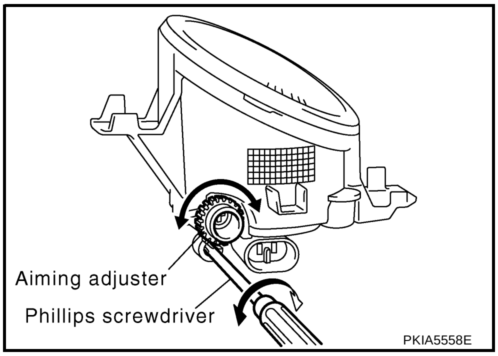

4. Adjust front fog lamps so that the top edge of the high intensity zone is 100 mm (3.94 in) below the height of front fog lamp centers as shown in the figure.
   - When performing adjustment, if necessary, cover headlamps and opposite front fog lamp.

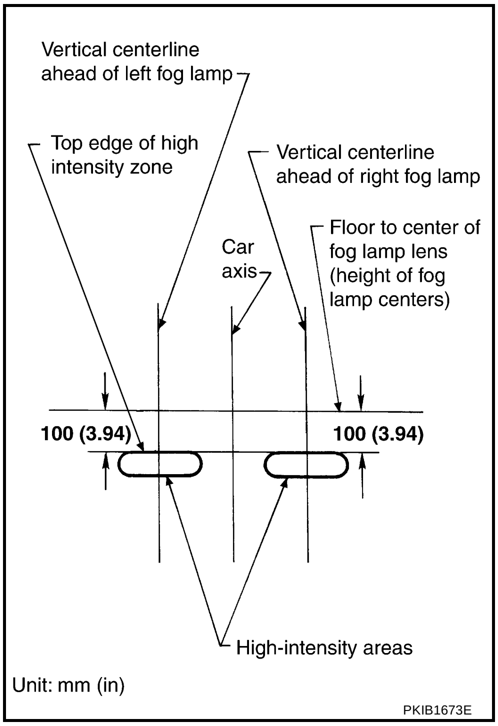

Bulb Replacement

AKS00B8R

1. Remove front fog lamp. Refer to LT-39, "Removal and Installation" .
2. Turn bulb socket counterclockwise and unlock it.
3. Remove bulb from its socket.
4. Installation is the reverse of removal.

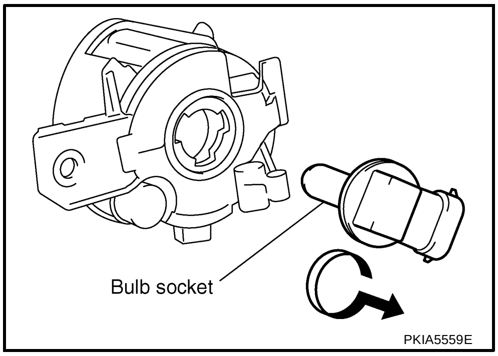

Front fog lamp : 12V - 55W (H11)

CAUTION:

- **Do not touch glass of bulb directly by hand. Keep grease and other oily matters away from it. Do not touch bulb by hand while it is lit or right after being turned off. Burning may result.**
- **Do not leave bulb out of fog lamp housing for a long time because dust, moisture, smoke, etc. May affect the performance of front fog lamp. When replacing bulb, be sure to replace it with new one.**

Removal and Installation

AKS00B8S

REMOVAL

1. Remove fender protector. Refer to EI-20, "FENDER PROTECTOR" .
2. Disconnect front fog lamp connector.
3. Remove front fog lamp mounting nuts (2) from fog lamp bracket.
4. Pull out front fog lamp from vehicle and disconnect connector.

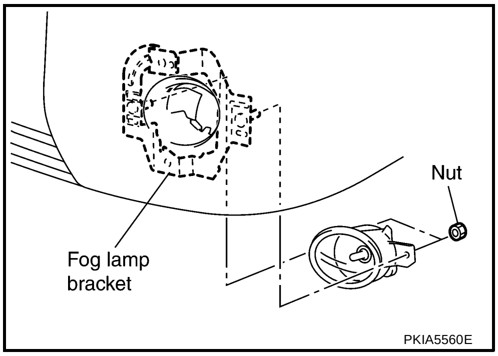

INSTALLATION

Installation is the reverse of removal. Note the tightening torque shown below.

Front fog lamp mounting nut : 5.5 N·m (0.56 kg-m, 49 in-lb)

HIGH-MOUNTED STOP LAMP

PFP:26590

Bulb Replacement

AKS00B90

Refer to LT-27, "HIGH-MOUNTED STOP LAMP" .

Removal and Installation

AKS00B91

Refer to LT-27, "REMOVAL" .

REAR COMBINATION LAMP

PFP:26554

Bulb Replacement

AKS00B93

1. Remove rear combination lamp mounting bolts (2).
2. Pull rear combination lamp toward rear of vehicle. Disengage locating pins (3).
3. Turn bulb socket counterclockwise and unlock it.
4. Remove bulb from its socket.
5. Installation is the reverse of removal.

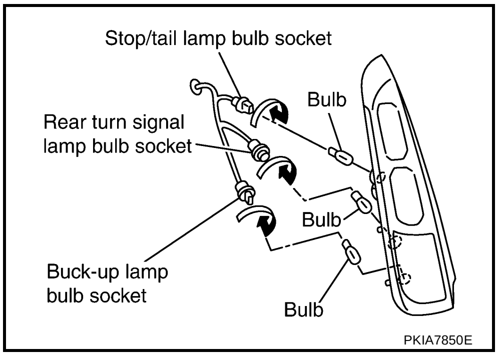

Stop/tail lamp	**: 12V - 21/5W**
Rear turn signal lamp	**: 12V - 21W**
Back-up lamp	**: 12V - 21W**

Removal and Installation

AKS00B94

REMOVAL

1. Remove luggage-side lower finisher. Refer to EI-36, "BODY SIDE TRIM" in “EI EXTERIOR & INTERIOR” section.
2. Disconnect rear combination lamp connector.
3. Remove rear combination lamp mounting bolts (2).
4. Pull rear combination lamp toward rear of vehicle. Disengage locating pins (3).
5. From outside the vehicle, pull harness grommet rearward, and remove harness.

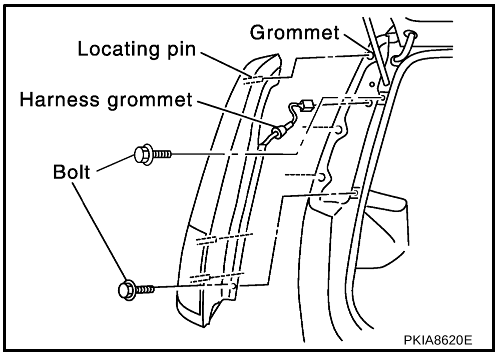

INSTALLATION

Installation is the reverse of removal. Note the tightening torque shown below.

Rear combination lamp mounting bolt **: 5.5 N·m (0.56 kg-m, 49 in-lb)**

A B C D E F G H I J LT L M

COMBINATION SWITCH

PFP:25567

Removal and Installation

AKS00B95

Refer to LT-24, "Removal and Installation" in “LIGHTING AND TURN SIGNAL SWITCH (LT)” section.

Switch Circuit Inspection

AKS00C3X

- Using circuit tester, check continuity between lighting and turn signal switch connector terminals in each operation status of switch.
  Lighting switch refers to LT-8, "Wiring Diagram — H/LAMP —" .
  Turn signal switch refers to LT-19, "Wiring Diagram — TURN —" .
  Fog lamp switch refers to LT-37, "Wiring Diagram — F/FOG —" .

LIGHTING SWITCH

	OFF			1ST			2ND		
	HIGH	LOW	PASS	HIGH	LOW	PASS	HIGH	LOW	PASS
5			O			O	O	O	O
6			O			O	O		O
7								O	
8			O			O	O	O	O
9			O			O	O		O
10								O	
11				O	O	O	O	O	O
12				O	O	O	O	O	O

TURN SIGNAL LAMP SWITCH

	L	N	R
1	O		O
2			O
3	O		

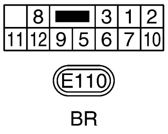

FRONT FOG LAMP SWITCH (with FRONT FOG LAMP)

	ON	OFF
31	O	
32	O	

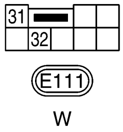

O-O :countinuity should exists.

PKIA8896E

- If any malfunction is found, replace switch. Refer to LT-24, "Removal and Installation" .

INTERIOR ROOM LAMP

PFP:26410

System Description

AKS00B9C

POWER SUPPLY AND GROUND

Power is supplied at all times

- through 10A fuse [No. 28, located in fuse block (J/B)]
- to key switch terminal 1 and
- through 10A fuse [No. 26, located in fuse block (J/B)]
- to smart entrance control unit terminal 49.

When key is withdrawn from ignition key cylinder,
power is interrupted

- through key switch terminal 2
- to smart entrance control unit terminal 25.

With ignition key switch in ON or START position,
power is supplied

- through 10A fuse [No. 5, located in fuse block (J/B)]
- to smart entrance control unit terminal 27.

Ground is supplied

- to smart entrance control unit terminals 43 and 64
- through grounds M27 and M70.

When front driver side door is opened,
ground is supplied

- through grounds B8 and B18
- to front door switch (driver side) terminal 3
- from front door switch (driver side) terminal 2
- to smart entrance control unit terminal 1.

When any door (except back door) is opened,
ground is supplied

- through case ground of each door switch
- to each door switch terminal 1
- to smart entrance control unit terminal 2.

When back door is opened,
ground is supplied

- through ground D53
- to back door switch terminal 3
- from back door switch terminal 1
- to smart entrance control unit terminal 2.

When power window main switch (door lock/unlock switch) is unlocked, smart entrance control unit receives a ground signal

- through grounds M27 and M70
- to power window main switch (door lock/unlock switch) terminal 19
- from power window main switch (door lock/unlock switch) terminal 18
- to smart entrance control unit terminal 4.

When driver side or passenger side door key cylinder switch is unlocked, smart entrance control unit receives a ground signal

- through grounds M27 and M70
- to door key cylinder switch (driver side and passenger side) terminal 2
- from door key cylinder switch terminal 3 (driver side) or terminal 1 (passenger side)
- to smart entrance control unit terminal 10.

When a signal or combination of signals is received by smart entrance control unit,
ground is supplied

- through smart entrance control unit terminal 31
- to interior room lamp terminal 2
- to map lamp terminal 3 (with sunroof).

With power and ground supplied, interior room lamp and map lamp (with sunroof) illuminates.

SWITCH OPERATION

When interior room lamp switch is ON,
ground is supplied

- through case grounds of interior room lamp
- to interior room lamp.

And power is supplied

- to interior room lamp terminal 1
- from smart entrance control unit terminal 50.

When map lamp switch is ON (with sunroof),
ground is supplied

- through grounds M27 and M70
- to map lamp terminal 2.

And power is supplied

- to map lamp terminal 1
- from smart entrance control unit terminal 50.

When luggage room lamp switch is ON,
ground is supplied

- through case grounds of luggage room lamp
- to luggage room lamp.

And power is supplied

- to luggage room lamp terminal 1
- from smart entrance control unit terminal 50.

When front door switch (driver side) is ON (door is opened),
ground is supplied

- through case ground of front door switch (driver side)
- from front door switch (driver side) terminal 1
- to luggage room lamp terminal 2.

And power is supplied

- to luggage room lamp terminal 1
- from smart entrance control unit terminal 50.

When front door switch (passenger side) is ON (door is opened),
ground is supplied

- through case ground of front door switch (passenger side)
- from front door switch (passenger side) terminal 1
- to luggage room lamp terminal 2.

And power is supplied

- to luggage room lamp terminal 1
- from smart entrance control unit terminal 50.

When rear door switch (LH and/or RH) is ON (door is opened),
ground is supplied

- through case ground of rear door switch
- from rear door switch terminal 1
- to luggage room lamp terminal 2.

And power is supplied

- to luggage room lamp terminal 1
- from smart entrance control unit terminal 50.

When back door switch is ON (door is opened),
ground is supplied

- through ground D53
- to back door switch terminal 3
- from back door switch terminal 1
- to luggage room lamp terminal 2.

And power is supplied

- to luggage room lamp terminal 1
- from smart entrance control unit terminal 50.

BATTERY SAVER

The lamp turns OFF automatically when interior room lamp, map lamp (with sunroof) and/or luggage room lamp is illuminated with ignition key is in OFF position. If the lamp remains lit by door switch open signal or if lamp switch is in ON position for more than 30 minutes.
After lamps turn OFF by battery saver system, lamps illuminate again when

- driver door is locked or unlocked,
- door is opened or closed,
- key is removed from ignition key switch or inserted in ignition key switch,
- door key cylinder is locked or unlocked.

Schematic

AKS00B9E

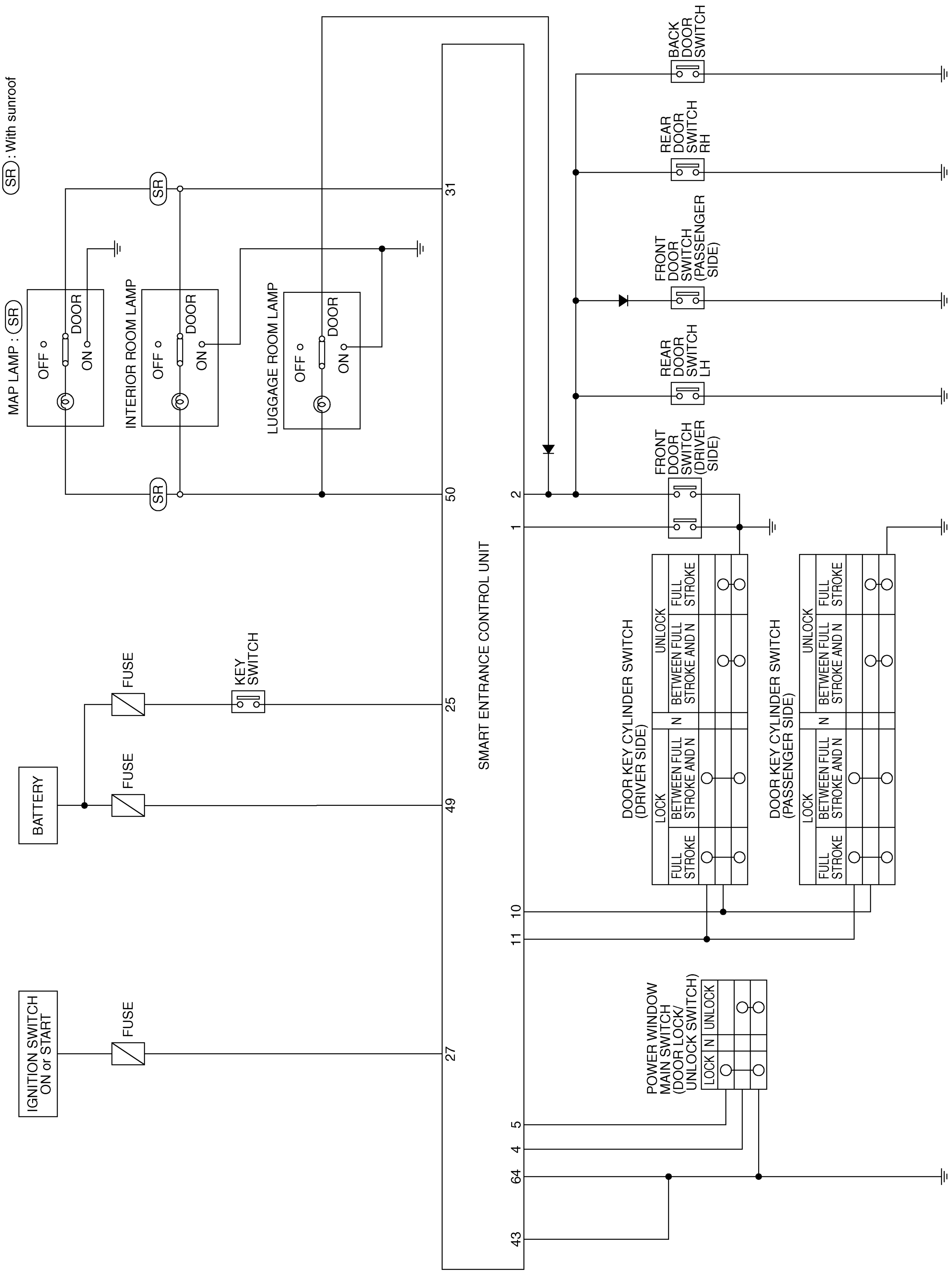

TKWB0163E

Wiring Diagram —ROOM/L—

AKS00B9F

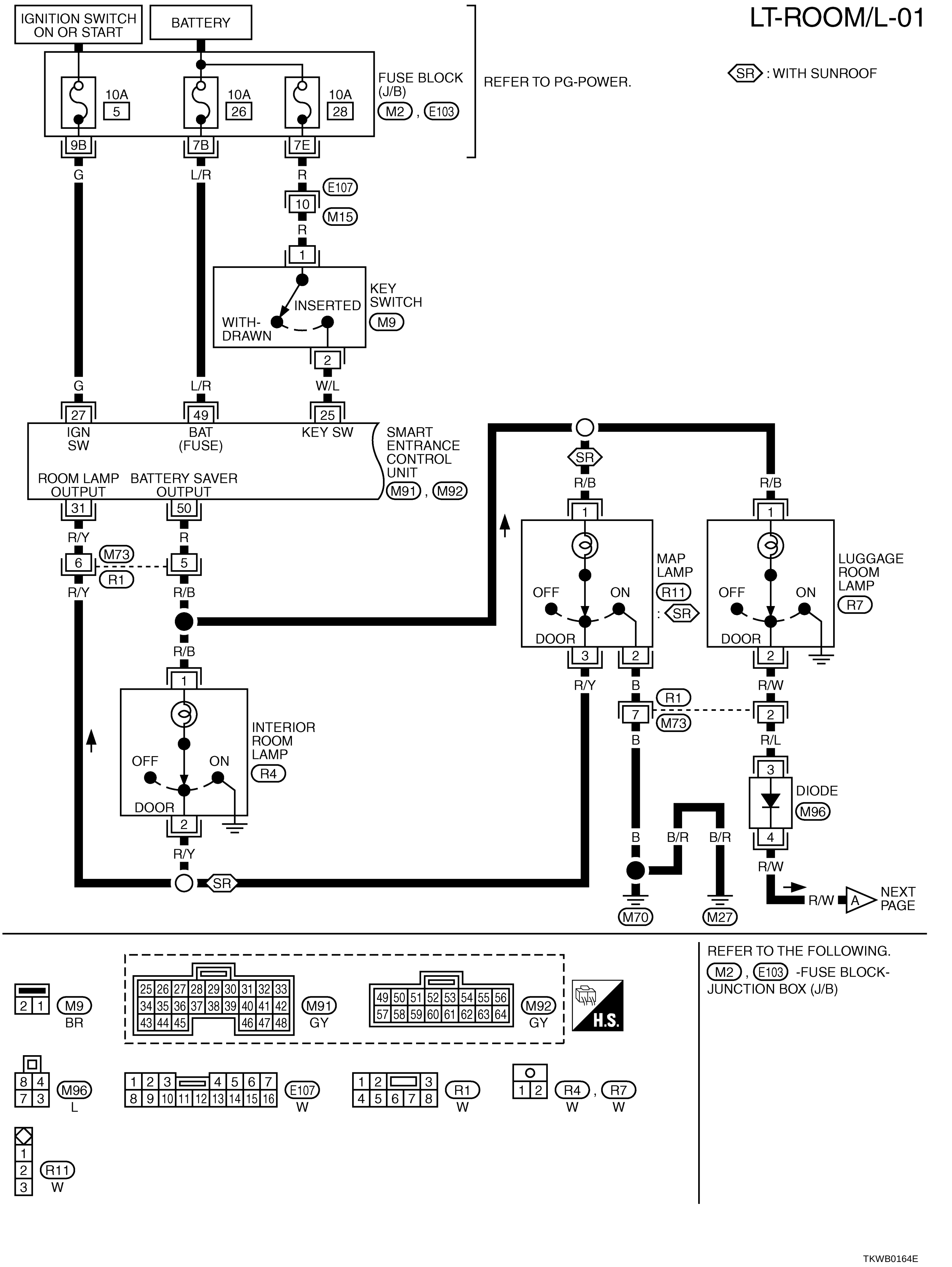

LT-ROOM/L-02

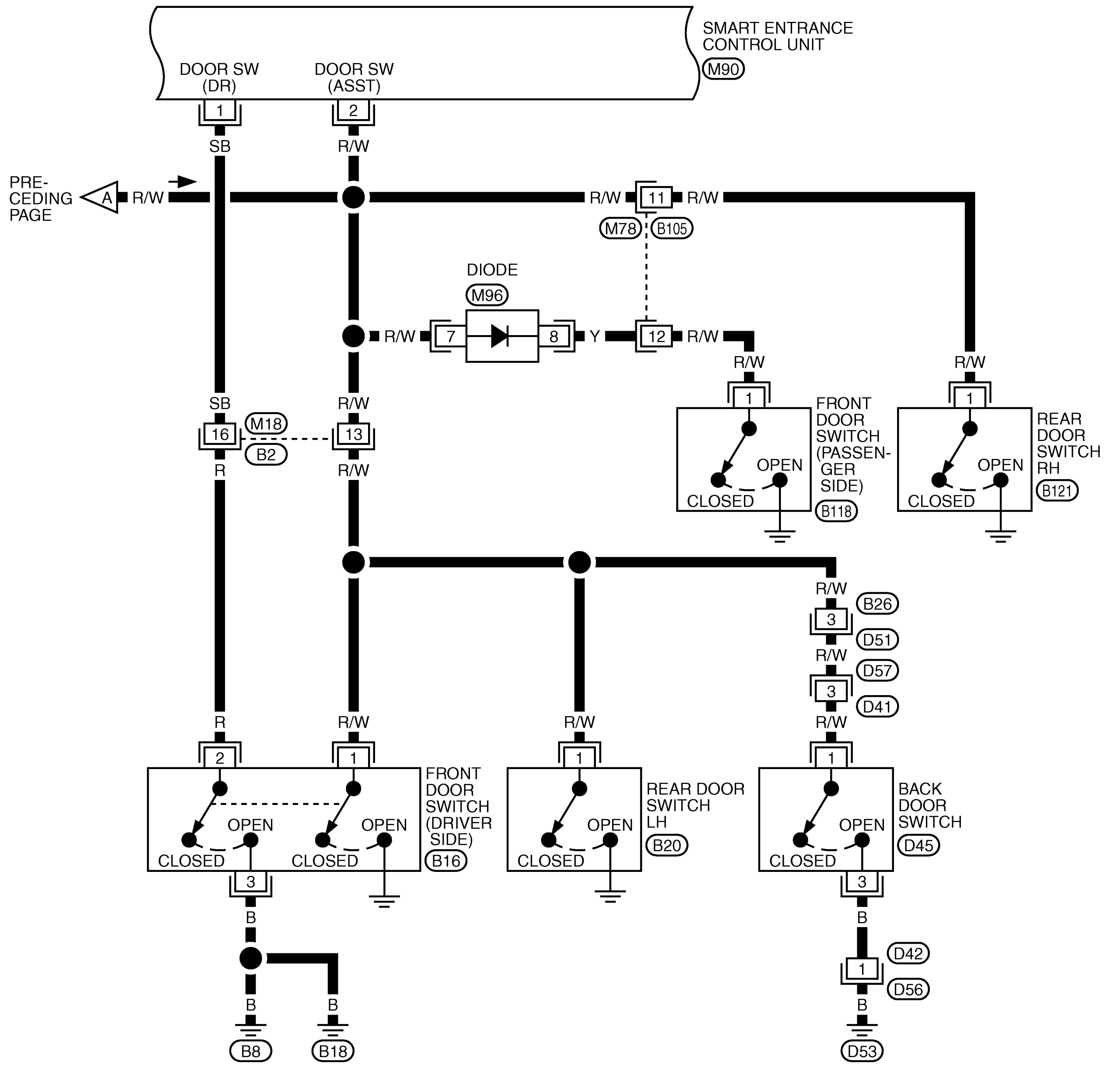

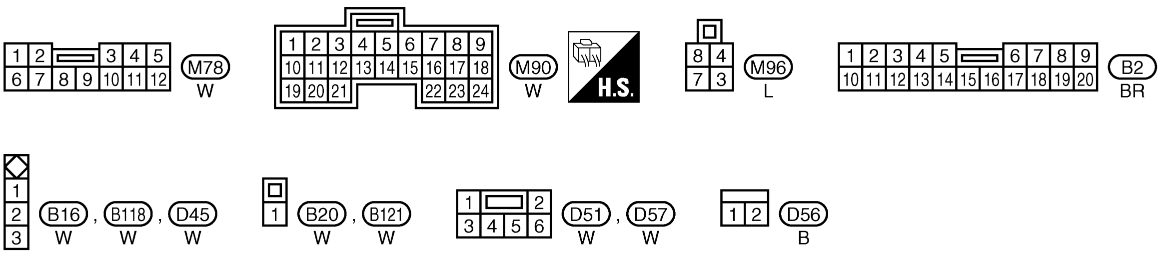

TKWB0165E

LT-ROOM/L-03

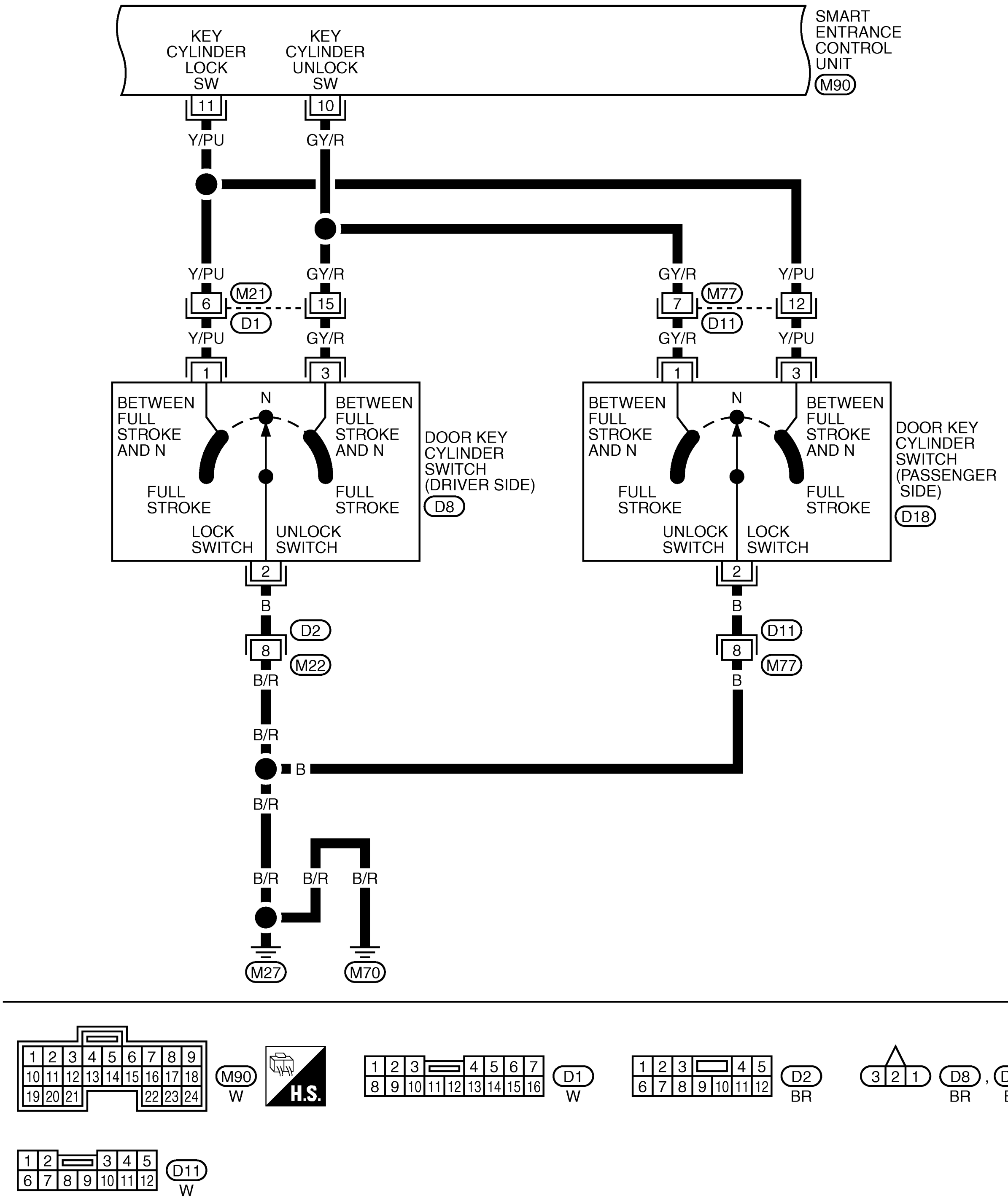

TKWB0166E

LT-ROOM/L-04

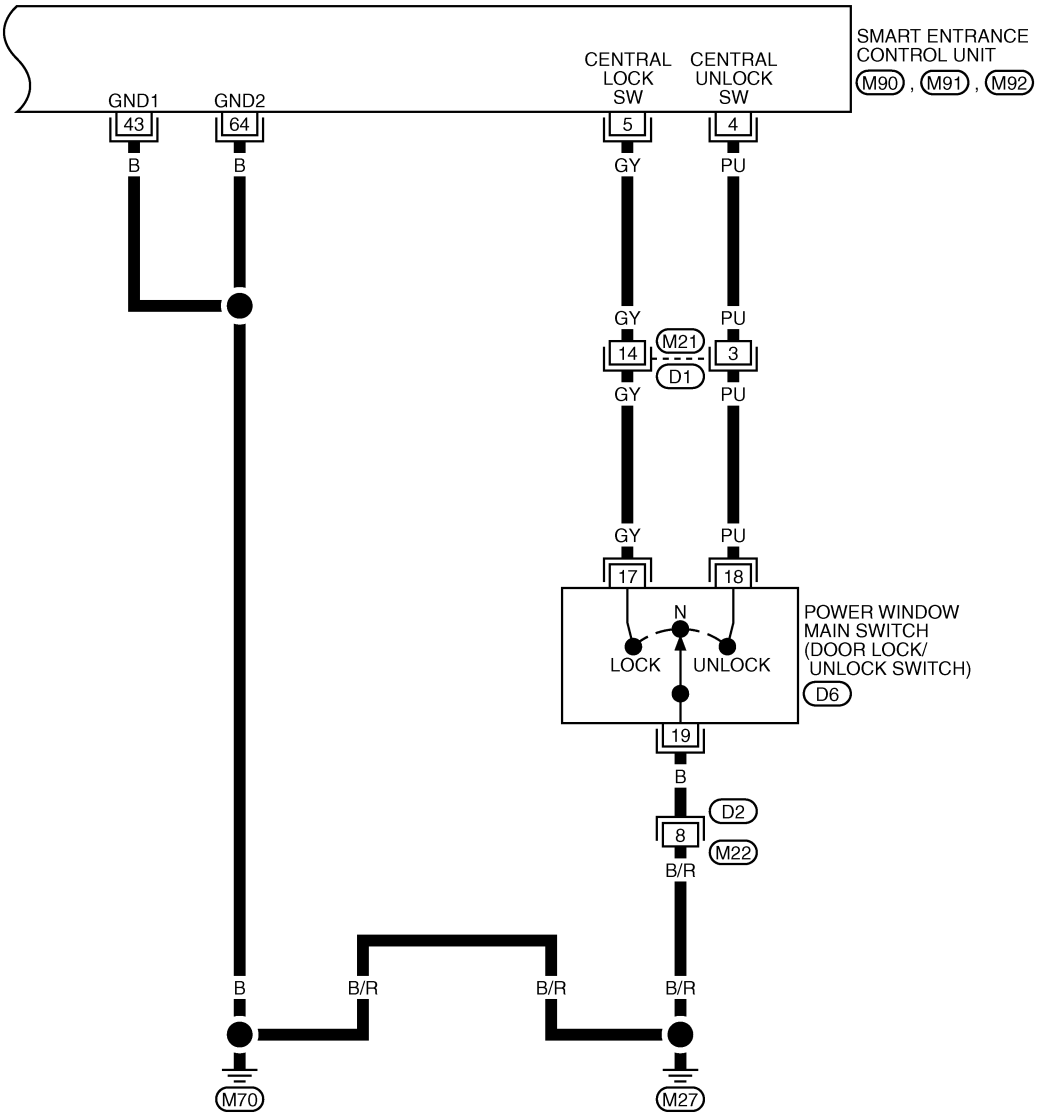

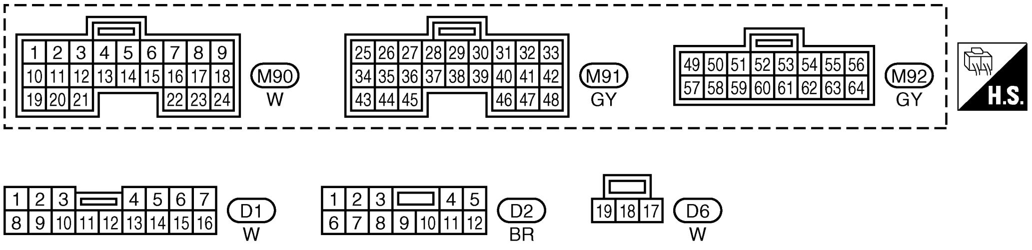

TKWB0167E

Interior Room Lamp Timer Does Not Operate

AKS00B9I

A B C D E F G H I J LT L M

1. CHECK POWER SUPPLY SIGNAL

1. Turn ignition switch OFF.
2. Disconnect smart entrance control unit connector.
3. Check voltage between smart entrance control unit harness connector and ground.

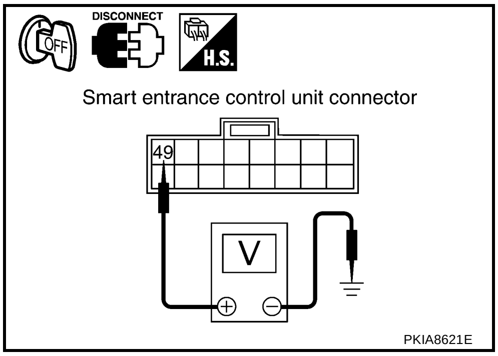

Terminals			Ignition switch position
(+)		(-)	OFF
Connector	Terminal (Wire color)		
M92	49 (L/R)	Ground	Battery voltage

OK or NG

OK >> GO TO 2.
NG >> Check harness for open or short between smart entrance control unit and fuse No. 26 (10A).

2. CHECK FRONT DOOR SWITCH (DRIVER SIDE) INPUT SIGNAL

1. Connect smart entrance control unit connector.
2. Check voltage between smart entrance control unit harness connector and ground.

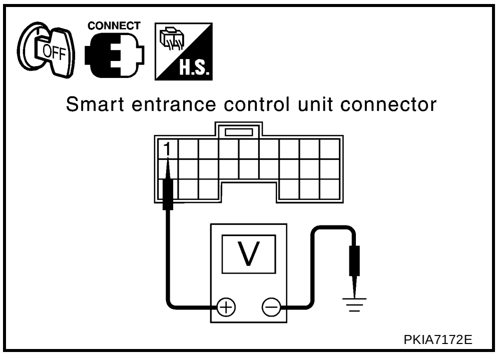

Terminals			Condition (driver door)	Voltage
(+)		(-)		
Connector	Terminal (Wire color)			
M90	1 (SB)	Ground	Open	Approx. 0V
			Closed	Approx. 5V

OK or NG

OK >> GO TO 4.
NG >> GO TO 3.

3. CHECK FRONT DOOR SWITCH (DRIVER SIDE)

1. Disconnect front door switch connector (driver side).
2. Check continuity between front door switch (driver side) terminals.

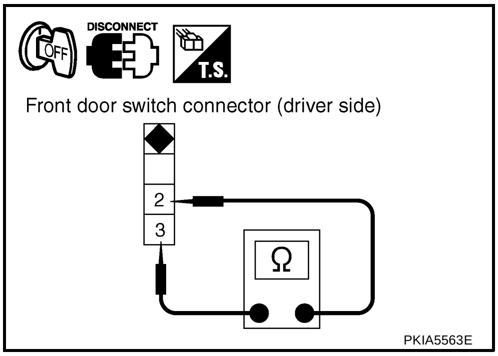

Connector	Terminals		Condition	Continuity
B16	2	3	Pushed (door closed)	No
			Released (door open)	Yes

OK or NG

OK >> Check the following.
- Front door switch (driver side) ground circuit condition
- Harness for open or short between smart entrance control unit and front door switch (driver side)

NG >> Replace front door switch (driver side).

4. CHECK DOOR SWITCHES INPUT SIGNAL

Check voltage between smart entrance control unit harness connector and ground.

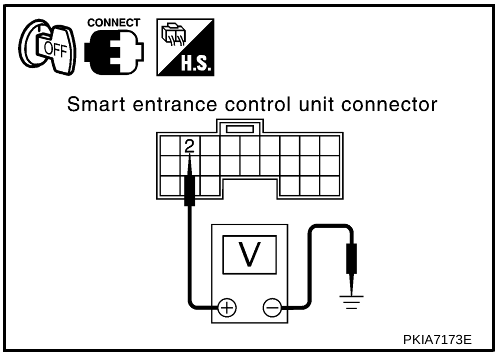

Terminals			Condition (All doors)	Voltage
(+)		(-)		
Connector	Terminal (Wire color)			
M90	2 (R/W)	Ground	Open	Approx. 0V
			Closed	Approx. 5V

OK or NG

OK >> GO TO 6.
NG >> GO TO 5.

5. CHECK DOOR SWITCHES

1. Disconnect each door switch harness connector and smart entrance control unit harness connector.
2. Check continuity between each door switch terminal and smart entrance control unit terminal.

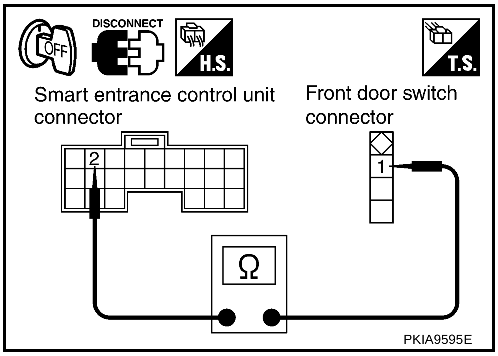

Terminals					Continuity
Smart entrance control unit		Door switch			
Connector	Terminal (Wire color)	Connector		Terminal (Wire color)	
M90	2 (R/W)	B16	Front door switch (driver side)	1 (R/W)	Yes
		B20	Rear door switch (LH)		
		B118	Front door switch (passenger side)		
		B121	Rear door switch (RH)		
		D45	Back door switch		

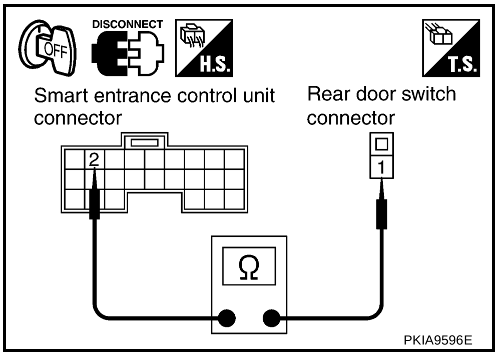

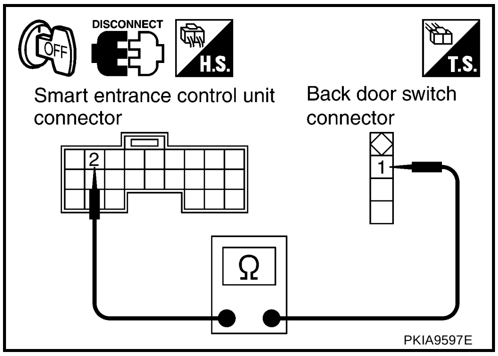

<u>OK or NG</u>

OK >> Check the following.
- Door switch ground condition.
- Replace door switch.

NG >> Harness for open or short between smart entrance control unit and each door switch.

6. CHECK KEY SWITCH INPUT SIGNAL

Check voltage between smart entrance control unit harness connector and ground.

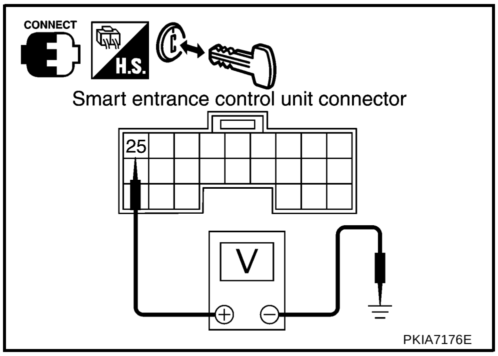

Terminals			Condition (Key switch)	Voltage
(+)		(-)		
Connector	Terminal (Wire color)			
M91	25 (W/L)	Ground	Inserted	Battery voltage
			withdrawn	Approx. 0V

OK or NG

OK >> Replace smart entrance control unit.
NG >> GO TO 7.

7. CHECK KEY SWITCH (INSERT)

1. Disconnect key switch connector.
2. Check continuity between key switch terminals.

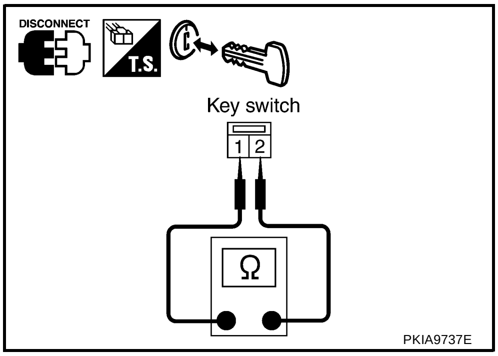

Connector	Terminals		Condition (Key switch)	Continuity
M9	1	2	Inserted	Yes
			withdrawn	No

OK or NG

OK >> Check the following.
- 10A fuse [No.28, located in fuse block (J/B)]
- Harness for open or short between key switch and fuse
- Harness for open or short between smart entrance control unit and key switch

NG >> Replace key switch.

Interior Room Lamp Timer Does Not Cancel

AKS00B9J

1. CHECK IGNITION ON SIGNAL

1. Turn ignition switch OFF.
2. Disconnect smart entrance control unit connector.
3. Check voltage between smart entrance control unit harness connector and ground.

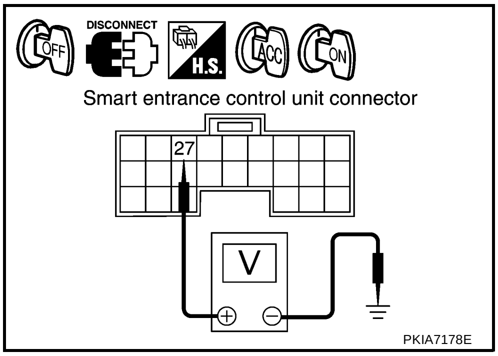

Terminals			Ignition switch position		
(+)		(-)	OFF	ACC	ON
Connector	Terminal (Wire color)				
M91	27 (G)	Ground	Approx. 0V	Approx. 0V	Battery voltage

OK or NG

OK >> GO TO 2.
NG >> Check the following.
- 10A fuse [No. 5, located in fuse block (J/B)]
- Harness for open or short between smart entrance control unit and fuse

2. CHECK DOOR SWITCH INPUT SIGNAL

1. Connect smart entrance control unit connector.
2. Check voltage between smart entrance control unit harness connector and ground.

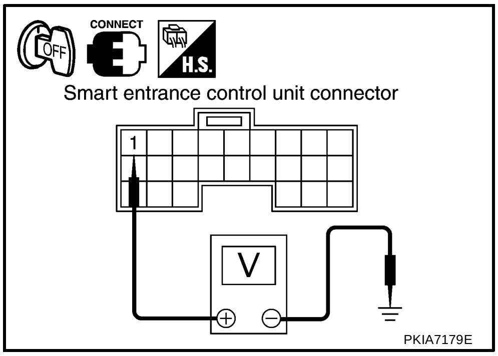

Terminals			Condition (driver door)	Voltage
(+)		(-)		
Connector	Terminal (Wire color)			
M90	1 (SB)	Ground	Open	Approx.0V
			Closed	Approx.5V

OK or NG

OK >> Replace smart entrance control unit.
NG >> GO TO 3.

3. CHECK FRONT DOOR SWITCH

1. Disconnect front door switch (driver side) connector.
2. Check continuity between front door switch (driver side) terminals.

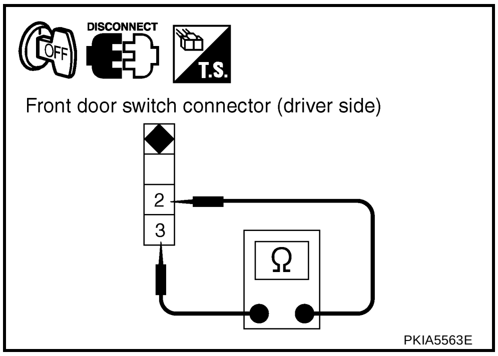

Connector	Terminals		Condition	Continuity
B16	2	3	Pushed (door closed)	No
			Released (door open)	Yes

OK or NG

OK >> Check the following.
- Front door switch (driver side) ground circuit condition
- Harness for open or short between smart entrance control unit and front door switch (driver side)

NG >> Replace front door switch (driver side).

Bulb Replacement

AKS00B9K

INTERIOR ROOM LAMP

1. Insert a narrow slotted screwdriver in the cutout, and remove lens.
2. Remove bulb.
3. Installation is the reverse of removal.

Room lamp : 12V - 10W

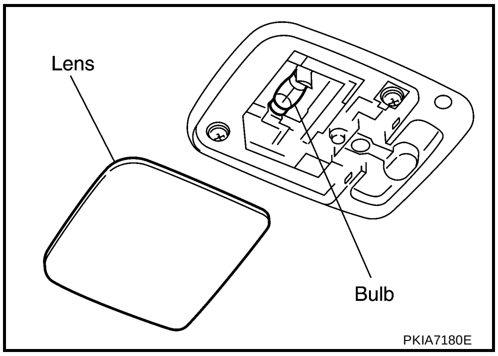

LUGGAGE ROOM LAMP

Refer to LT-56, "INTERIOR ROOM LAMP" .

Removal and Installation of Interior Room Lamp

AKS00B9L

REMOVAL

1. Insert a narrow slotted screwdriver in the cutout, and remove lens.
2. Remove room lamp mounting screws (2), and remove room lamp.
3. Disconnect interior room lamp connector.

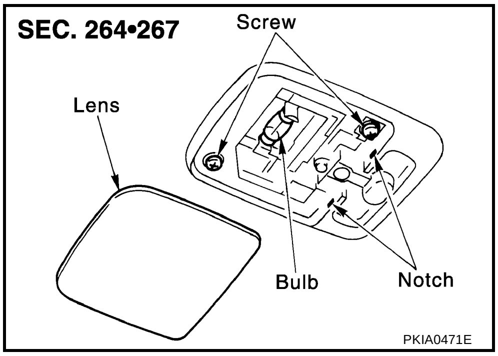

INSTALLATION

Installation is the reverse of removal.

Removal and Installation of Luggage Room Lamp

AKS00BQC

Refer to LT-56, "Removal and Installation of Interior Room Lamp" .

STEP LAMP

PFP:26420

Wiring Diagram — STEP/L —

AKS00B9M

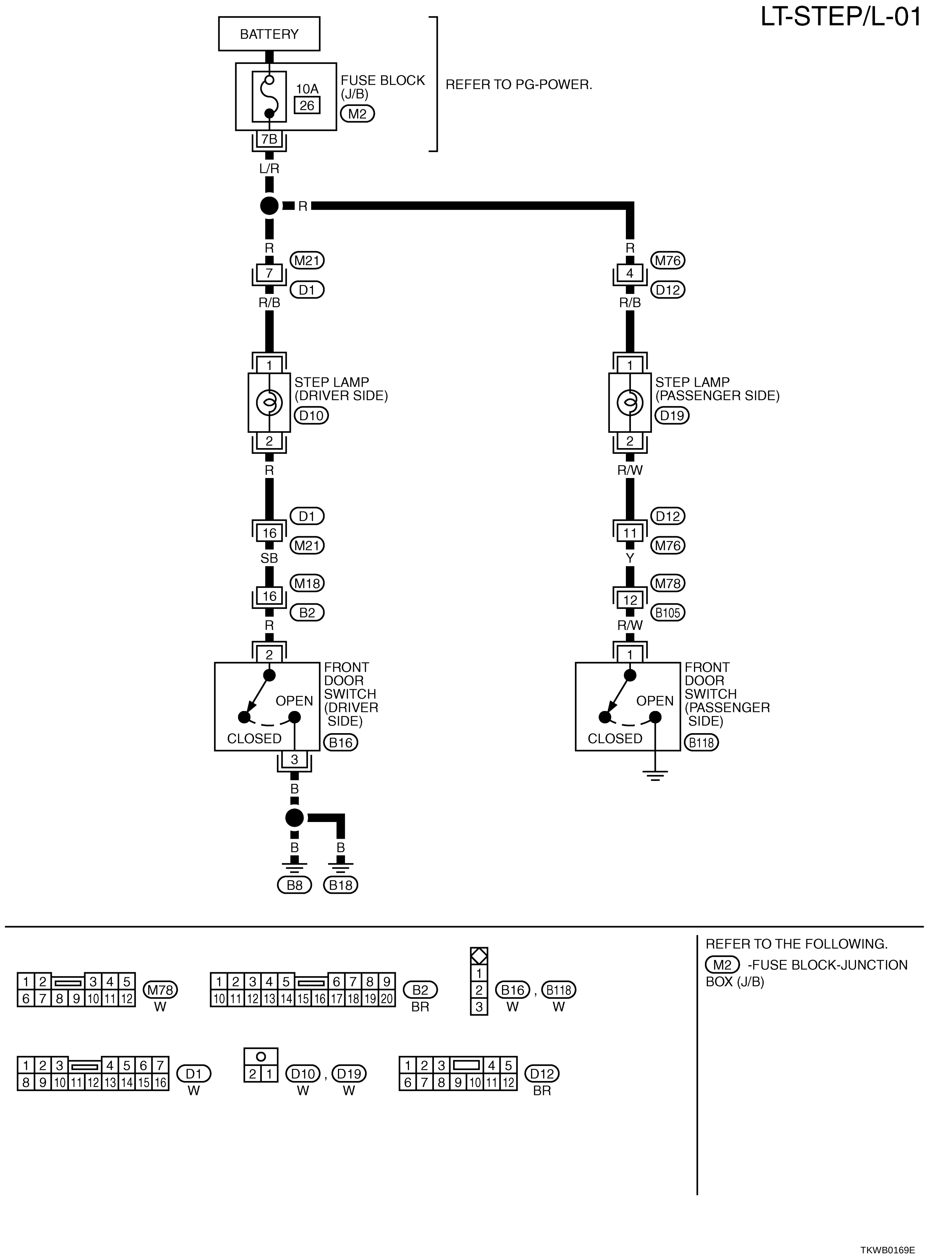

Bulb Replacement

AKS00B9N

1. Remove lens using a clip driver or a suitable tool.
2. Remove bulb.
3. Installation is the reverse of removal.

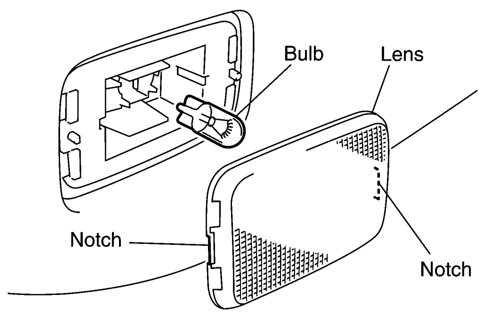

PKIA7192E

Step lamp	**:12V - 2.7W**

Removal and Installation

AKS00B9O

REMOVAL

1. Remove lens.
2. Using a clip driver or a suitable tool, press and remove metal clip of step lamp.
3. Disconnect step lamp connector.

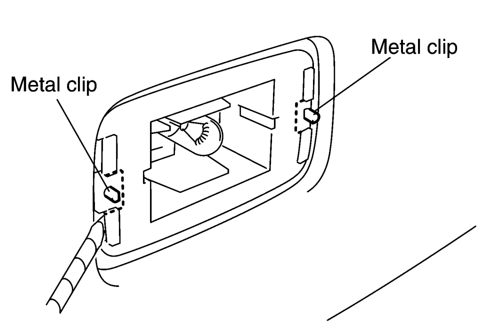

PKIA7193E

INSTALLATION

Install in the reverse order of removal.

MAP LAMP

PFP:26430

Wiring Diagram —INT/L—

AKS00B9P

LT-INT/L-01

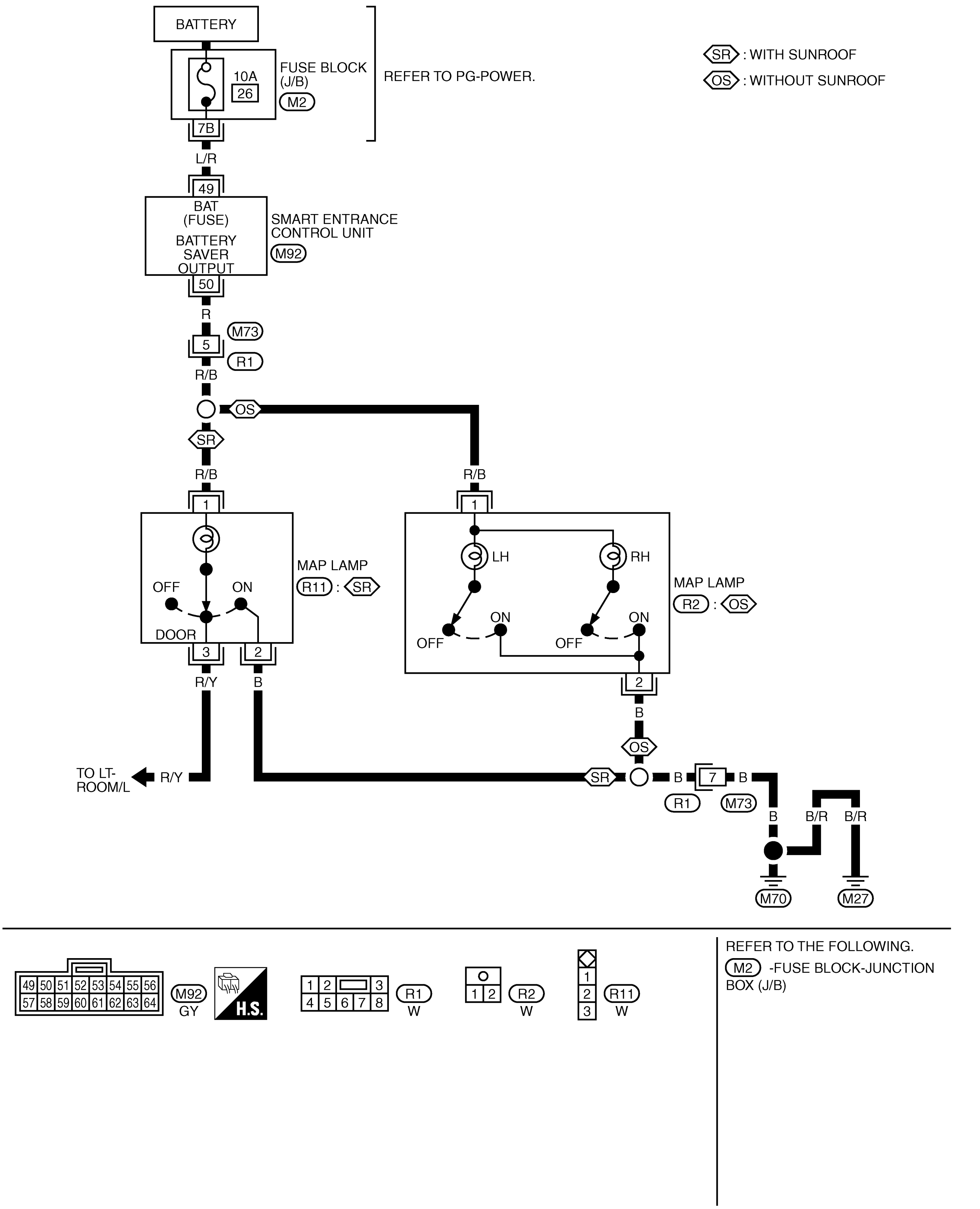

TKWB0168E

Bulb Replacement

AKS00B9Q

MAP LAMP (WITHOUT SUNROOF)

1. Remove lens using a clip driver or a suitable tool.
2. Remove shade mounting screw and remove shade from map lamp.
3. Remove bulb.
4. Installation is the reverse of removal.

Map lamp (Without sunroof) : 12V - 8W

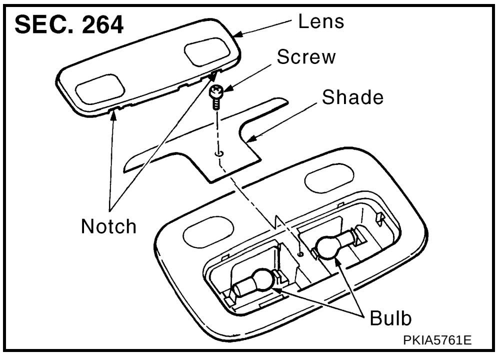

MAP LAMP (WITH SUNROOF)

1. Remove lens using a clip driver or a suitable tool.
2. Remove bulb.
3. Installation is the reverse of removal.

Map lamp (With sunroof) : 12V - 10W

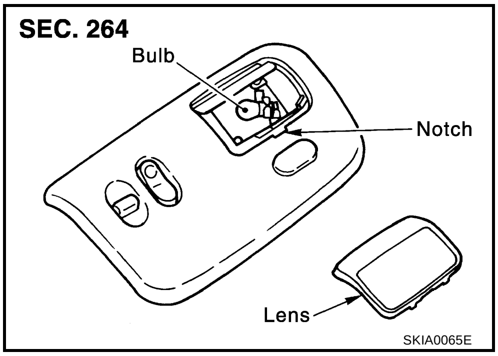

Removal and Installation of Map Lamp (Without Sunroof)

AKS00BQD

REMOVAL

1. Using a clip driver or a suitable tool, press and remove metal clip of map lamp.
2. Disconnect map lamp connector.

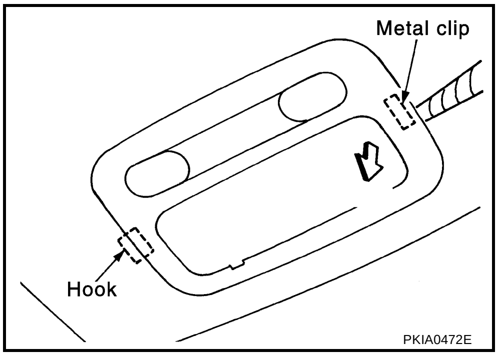

INSTALLATION

Installation is the reverse of removal.

Removal and Installation of Map Lamp (With Sunroof)

AKS00BQE

REMOVAL

1. Using a clip driver or a suitable tool, press and remove metal clip of map lamp.
2. Disconnect map lamp connector and sunroof connector.

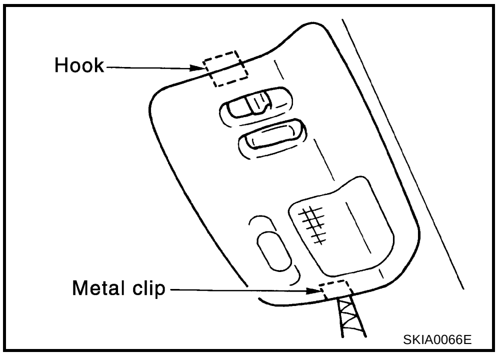

INSTALLATION

Installation is the reverse of removal.

ILLUMINATION

PFP:27545

System Description

AKS00B98

Power is supplied at all times

- through 10A fuse [No. 31, located in fuse and fusible link box]
- to combination switch (lighting switch) terminal 11.

The lighting switch must be in the 1ST or 2ND position for illumination.
The following chart shows the power and ground connector terminals for the components included in the illumination system.

Component	Connector No.	Power terminal	Ground terminal
Combination meter	M45	60	63
Snow mode switch (2WD models)	M122	5	6
AWD mode switch (AWD models)	M39	5	6
VDC OFF switch (with VDC)	M25	3	4
A/C auto amp. (with AUTO A/C)	M52	12	11
Rear window defogger switch (with MANUAL A/C)	M50	5	6
Heater control panel (with MANUAL A/C)	M55	2	6
Hazard switch	M51	7	8
A/T device illumination (with A/T)	M58	3	4
Audio unit	M108	8	7
Heated seat switch LH (with heated seat)	B212	5	6
Heated seat switch RH (with heated seat)	B213	5	6
Illumination control switch	M89	1	3

Schematic

AKS00B99

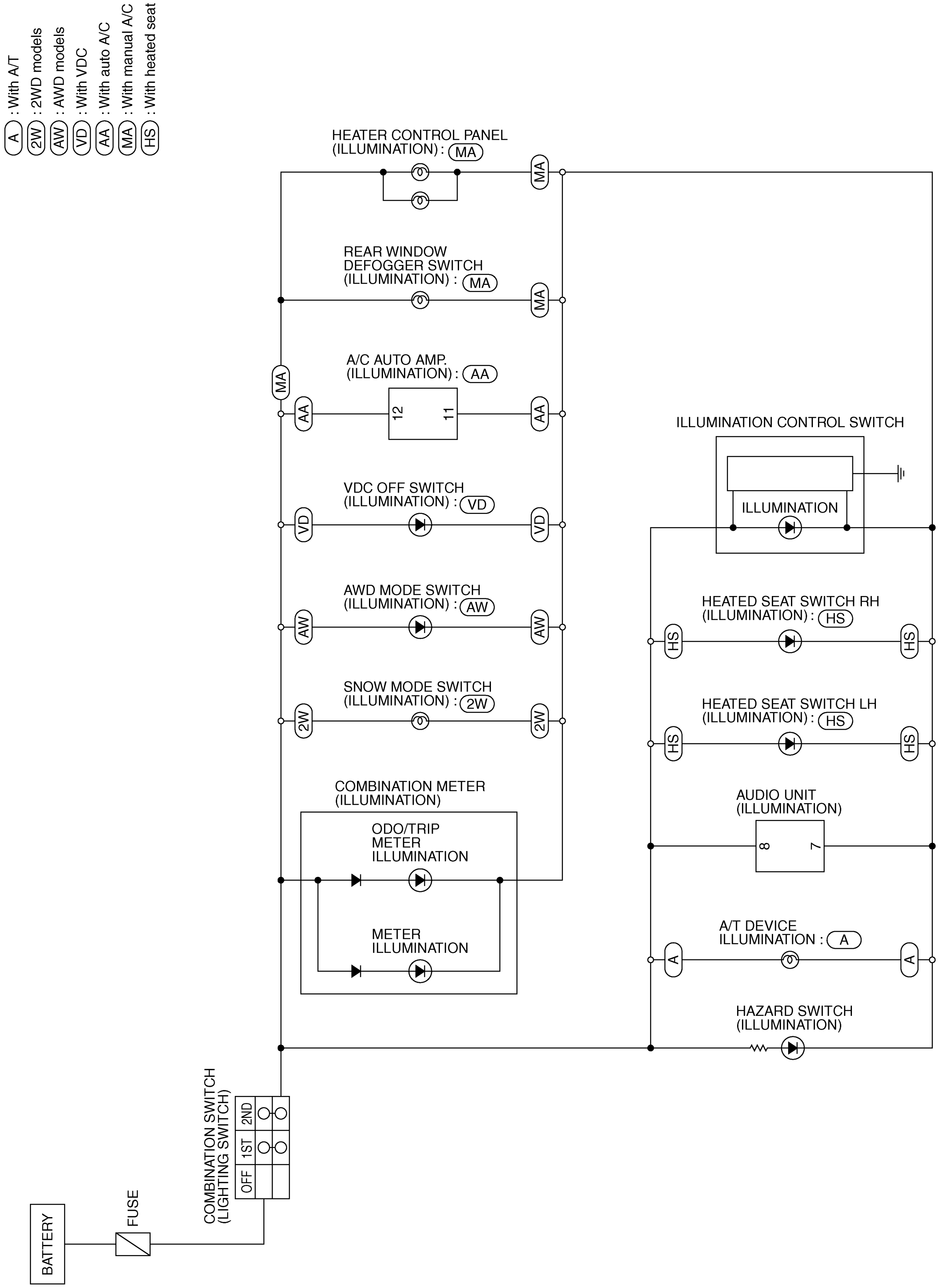

TKWB0158E

Wiring Diagram -ILL-

AKS00B9A

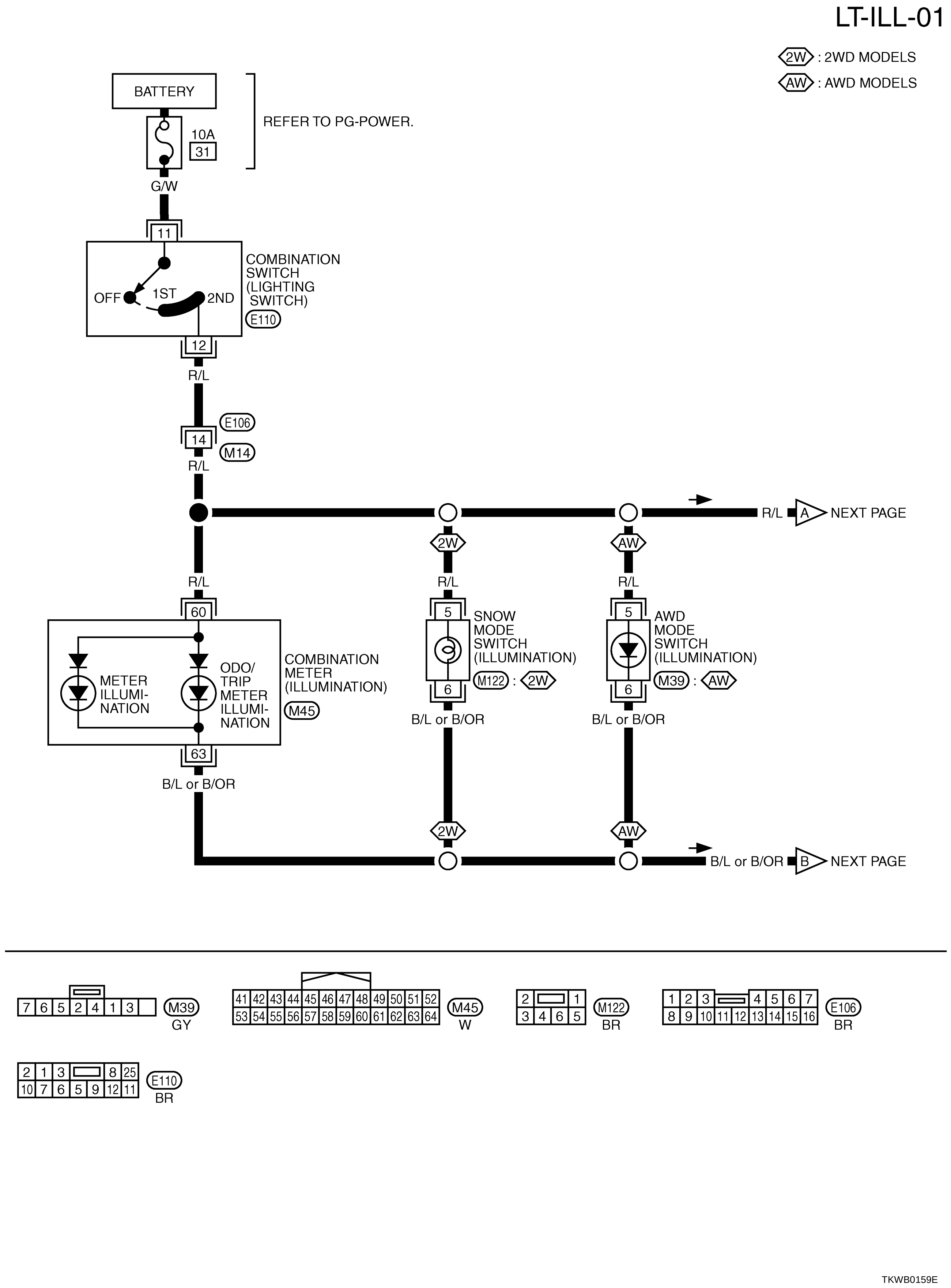

LT-ILL-02

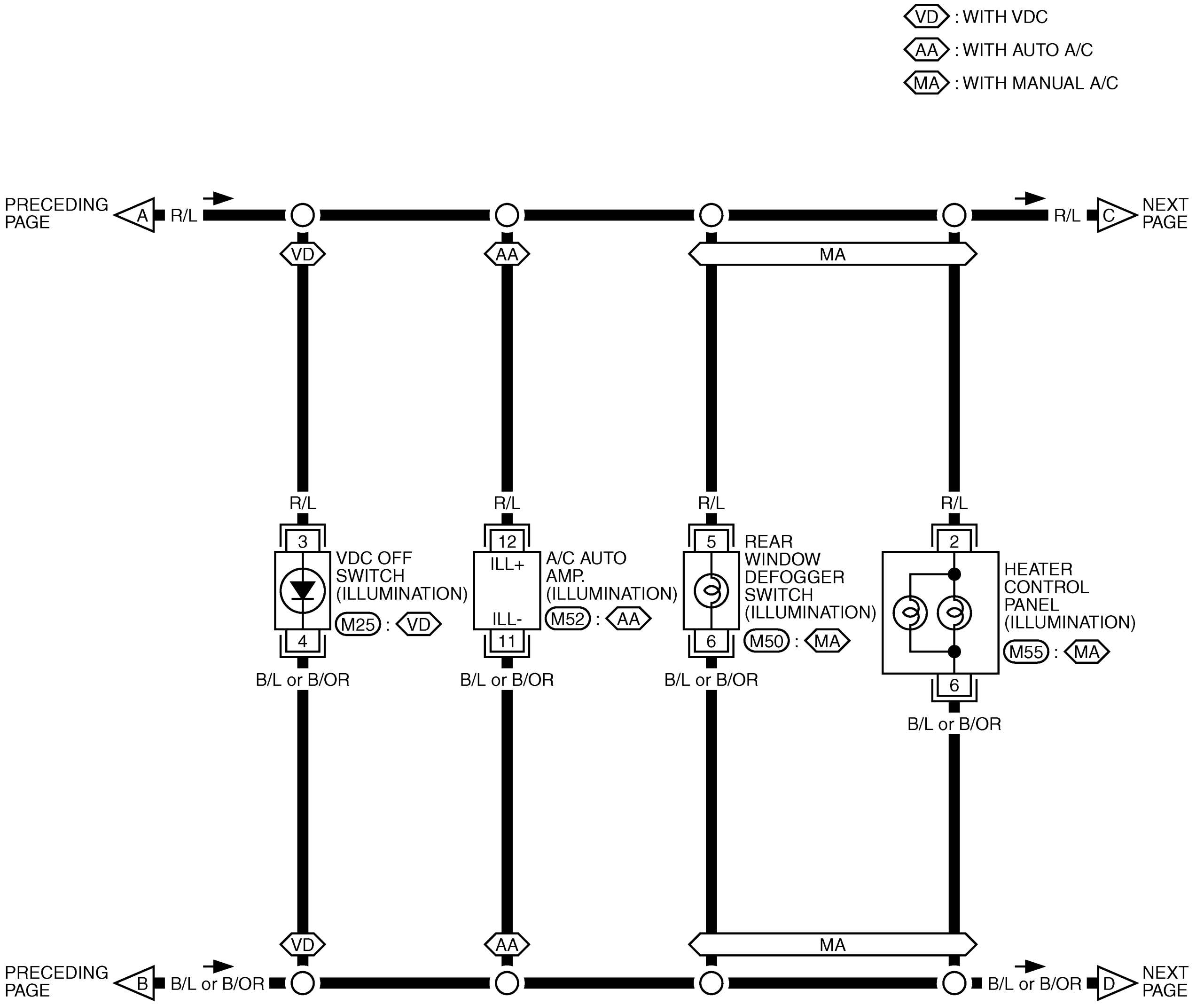

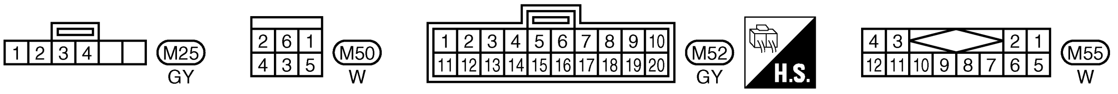

TKWB0160E

LT-ILL-03

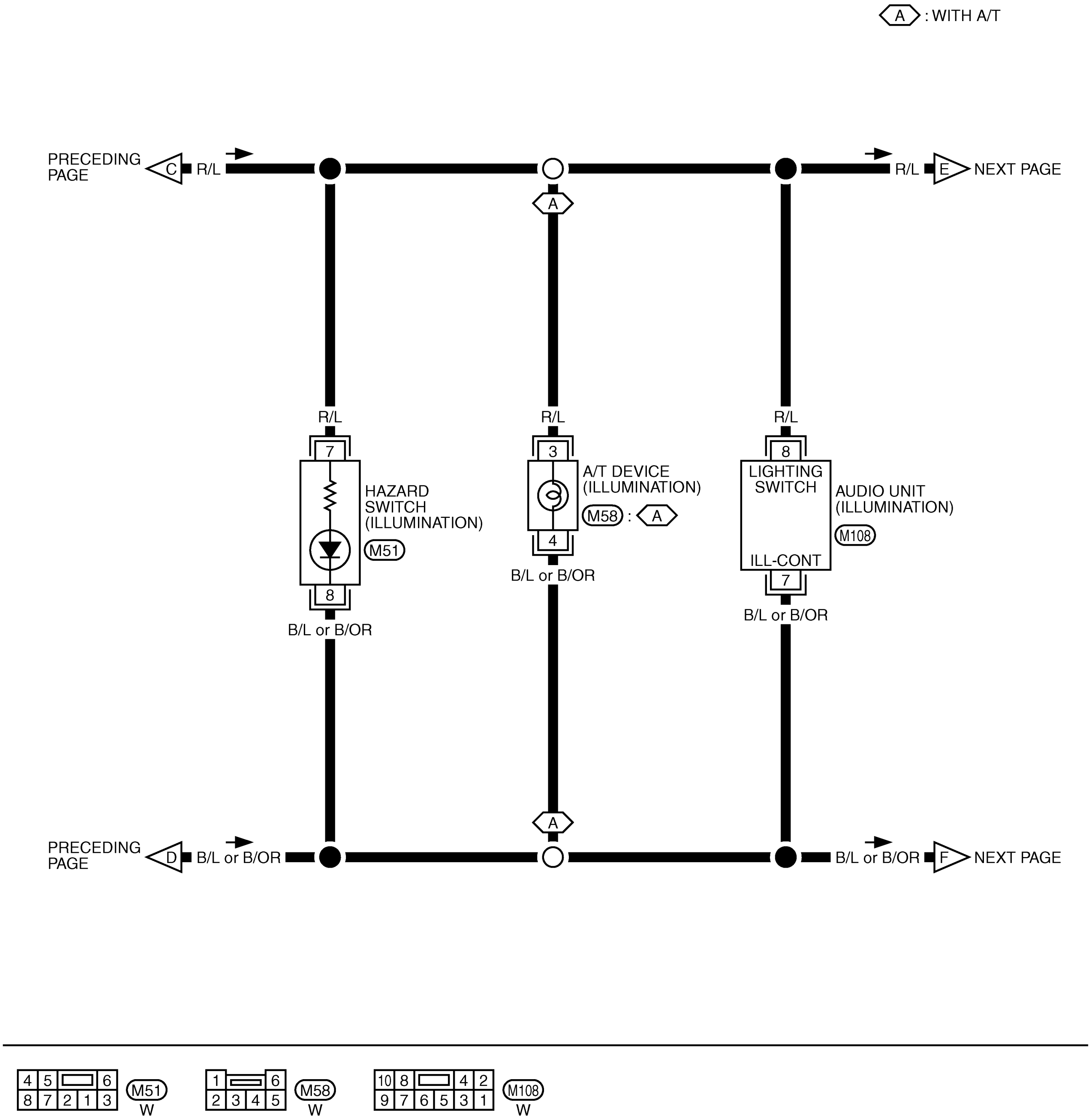

TKWB0161E

LT-ILL-04

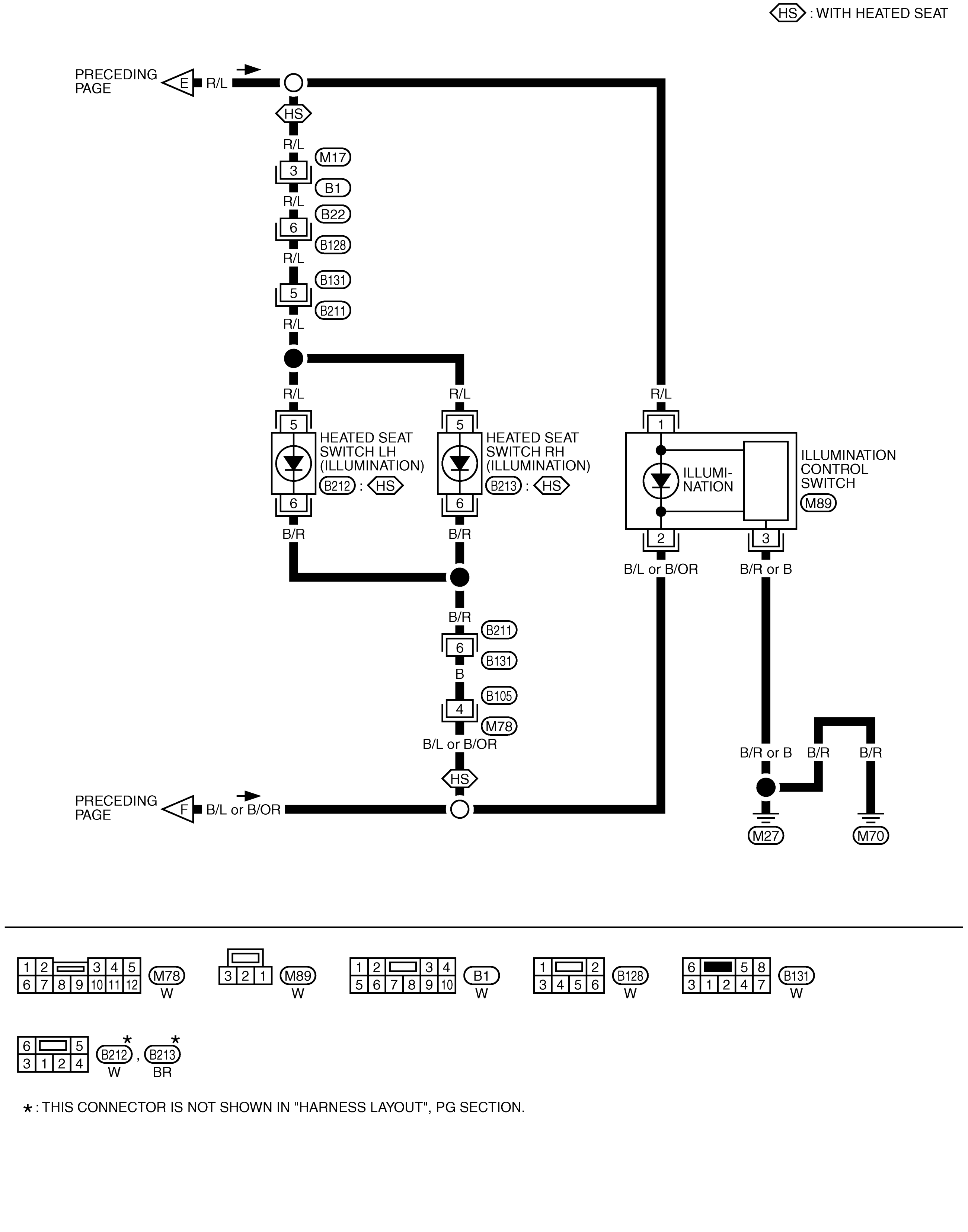
HS : WITH HEATED SEAT
PRECEDING PAGE
E
R/L
HS
M17
3
B1
B22
6
B128
B131
5
B211
HEATED SEAT SWITCH LH (ILLUMINATION)
B212 : HS
HEATED SEAT SWITCH RH (ILLUMINATION)
B213 : HS
B/R
ILLUMI-NATION
ILLUMINATION CONTROL SWITCH
M89
1
2
B/L or B/OR
B/R or B
B
B105
4
M78
F
M27
M70
M78 W
M89 W
B1 W
B128 W
B131 W
B212*, B213*
W BR
*: THIS CONNECTOR IS NOT SHOWN IN "HARNESS LAYOUT", PG SECTION.
TKWB0162E

BULB SPECIFICATIONS

PFP:26297

Headlamp

AKS00B9S

Item		Wattage (W)
Headlamp	High/Low	60/55 (H4)

Exterior Lamp

AKS00B9T

Item		Wattage (W)
Clearance lamp		21/5 (21W: Disuse)
Front turn signal lamp		21 (amber)
Side turn signal lamp		5 (amber)
Front side marker lamp		5
Rear side marker lamp		5
Front fog lamp		55 (H11)
Rear combination lamp	Stop/tail lamp	21/5
	Turn signal lamp	21
	Back-up lamp	21
License plate lamp		5
High-mounted stop lamp		5

Interior Lamp/Illumination

AKS00B9U

Item		Wattage (W)
Interior room lamp		10
Map lamp	Without sunroof	8
	With sunroof	10
Luggage room lamp		10
Step lamp		2.7